MoDoS Mini
Modular Dosing System – MoDoS®

Components

- rigid aluminum framework, profile 30 x 30 mm
- micro annular gear pump-6355 / mzr-7255
- filter F-MI2-T
- check valve
- terminal box S-G05 (not shown)
- pump interface 0-10 V and RS-232
- tubing OD 6 mm
- dimensions: 246 x 146 x 172 mm

Flow Diagram

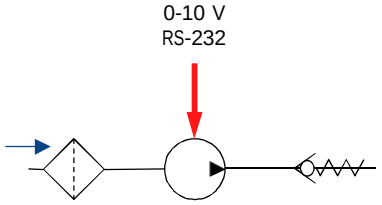

master_modos.pptx – 08/17

MoDoS Lab
Modular Dosing System – MoDoS®

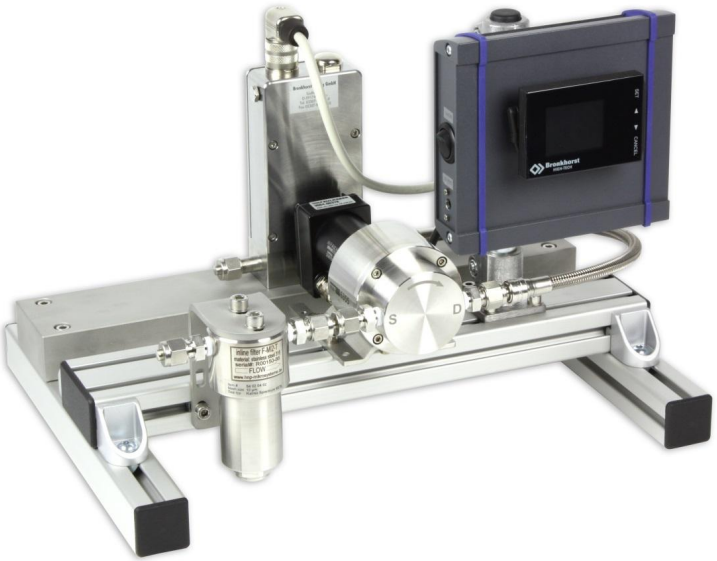

Components

- rigid aluminum framework, profile 30 x 30 mm
- micro annular gear pump mzr-6355 / mzr-7255
- filter F-MI2-T
- coriolis flow meter with integrated controller
- closed loop flow control
- optional check valve (not shown)
- push button display for local control
- setpoint 0-10 V or 4-20 mA and RS-232
- pump interface RS-232
- tubing OD 6 mm
- dimensions: 350 x 266 x 270 mm

Flow Diagram

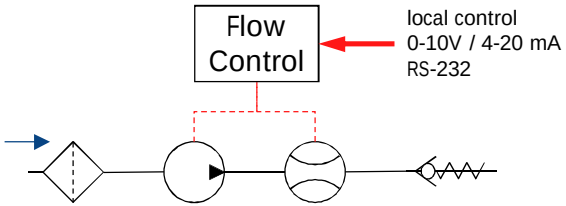

master_modos.pptx – 08/17

MoDoS Slim
Modular Dosing System – MoDoS®

Flow Diagram

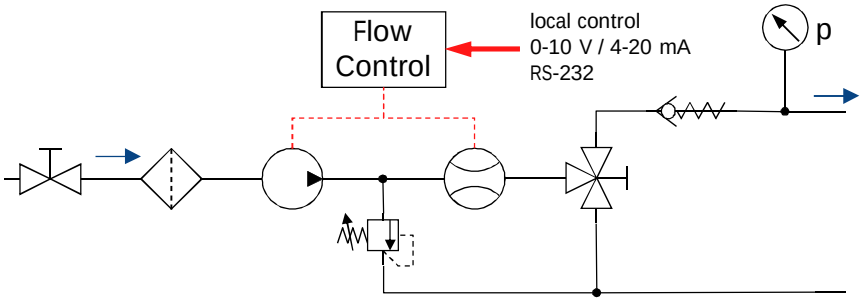

Components

- rigid aluminum framework, profile 30 x 30 mm
- micro annular gear pump mzr-6355 / mzr-7255
- filter F-SW2-T / F-MI2-T for easy maintenance
- 3-way filling ball valve
- coriolis flow meter with integrated controller
- closed loop flow control
- pressure relief valve
- check valve
- manometer
- drip tray
- push button display for local control
- manual switch over from external set point control to local push button control
- setpoint 0-10 V or 4-20 mA and RS-232
- pump interface RS-232
- inlet isolation ball valve
- tubing OD 1/8"
- dimensions: 250 x 300 x 450 mm

master_modos.pptx – 08/17

MoDoS Pilot
Modular Dosing System – MoDoS®

Flow Diagram

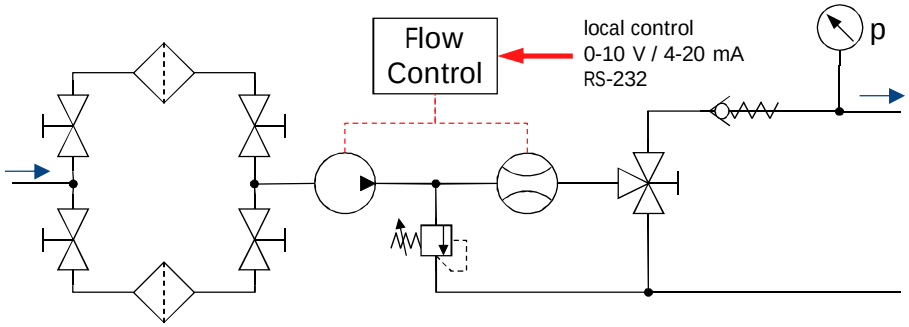

Components

- rigid aluminum framework, profile 40 x 40 mm
- micro annular gear pump mzr-6355 / mzr-7255
- duty / standby filters F-MI2-T for easy maintenance
- 3-way filling ball valve
- coriolis flow meter with integrated controller
- closed loop flow control
- pressure relief valve / overflow
- check valve
- manometer
- drip tray
- push button display for local control
- setpoint 0-10 V or 4-20 mA and RS-232
- pump interface RS-232
- inlet isolation ball valve
- tubing OD 6 mm
- dimensions: 450 x 450 x 450 mm

master_modos.pptx – 08/17

MoDoS Pro
Modular Dosing System – MoDoS®

Flow Diagram

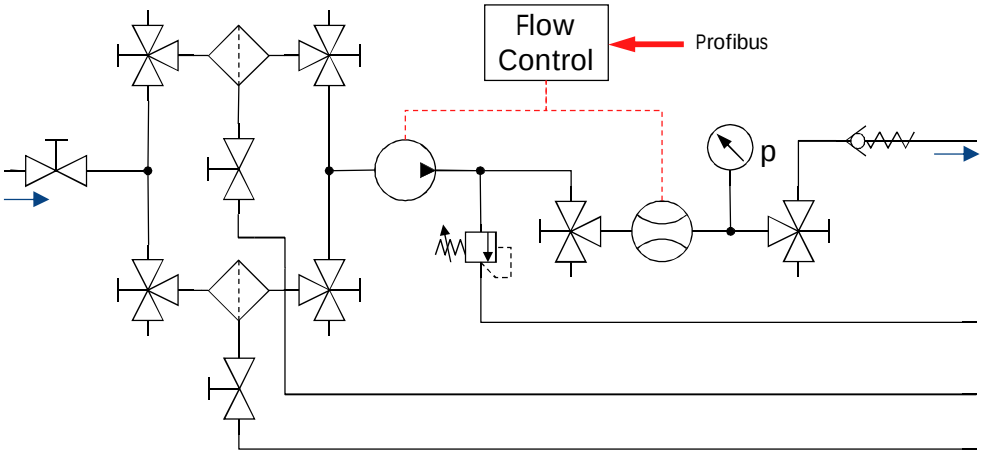

Components

- rigid aluminum framework, profile 40 x 40 mm
- micro annular gear pump mzr-6355 / mzr-7255
- duty / standby filters F-MI2-T for easy maintenance
- 3-way filling ball valve
- coriolis flow meter with integrated controller
- closed-loop flow control
- pressure relief valve/overflow
- check valve
- pressure transmitter with display
- Profibus interface
- 3-way ball valves for calibration of flow meter and pressure transmitter without disassembly
- 2-way drain ball valves
- 3-way filter flush ball valves
- swivel castors for easy transport
- fasteners for stacking of multiple MoDoS
- tubing OD 1/4"
- dimensions: 570 x 570 x 570 mm

master_modos.pptx – 08/17