G04 Series

Maximum Flow Rate: 11.2 l/min (2.9 gpm)
Maximum Pressure: 172 bar (2500 psi) for Metallic Pump Heads

ATEX

WANNER Hydra-Cell® Seal-less Pump Technology

G04 with Stainless Steel pump head

G04 with Brass pump head

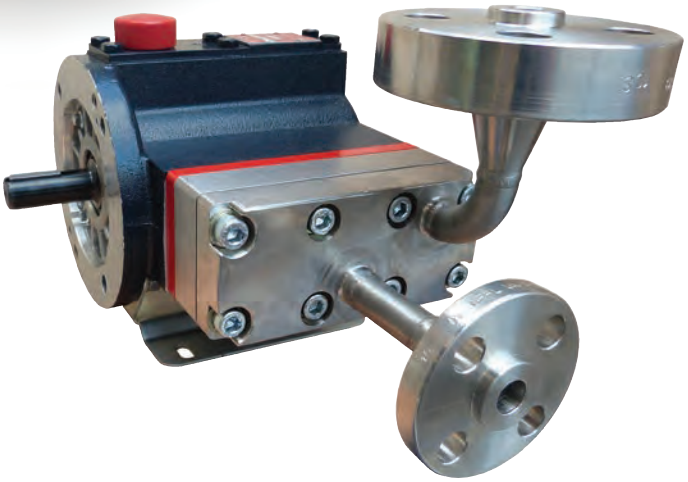

G04 with Stainless Steel pump head and ANSI RF flanges.

G04 Series Performance

Capacities

Flow

Model	Max. Input rpm	Max. Flow @ 172 bar (2500 psi) gpm	l/min
G04-X	1750	2.9	11.2
G04-E	1750	2.0	7.7
G04-S	1750	1.6	6.2

Pressure

Maximum Inlet Pressure
34 bar (500 psi)

Maximum Discharge Pressure
172 bar (2500 psi)

Performance and specification ratings apply to G04 configurations unless specifically noted otherwise.

Metering & Dosing

API 675 Performance Characteristics of Steady State Accuracy ± 1%, Linearity ± 3% and Repeatability ± 3% can be achieved at speeds up to 1440 rpm and pressures up to 172 bar (metallic pump heads) for X-cam pumps only.

Maximum Flow at Designated Pressure

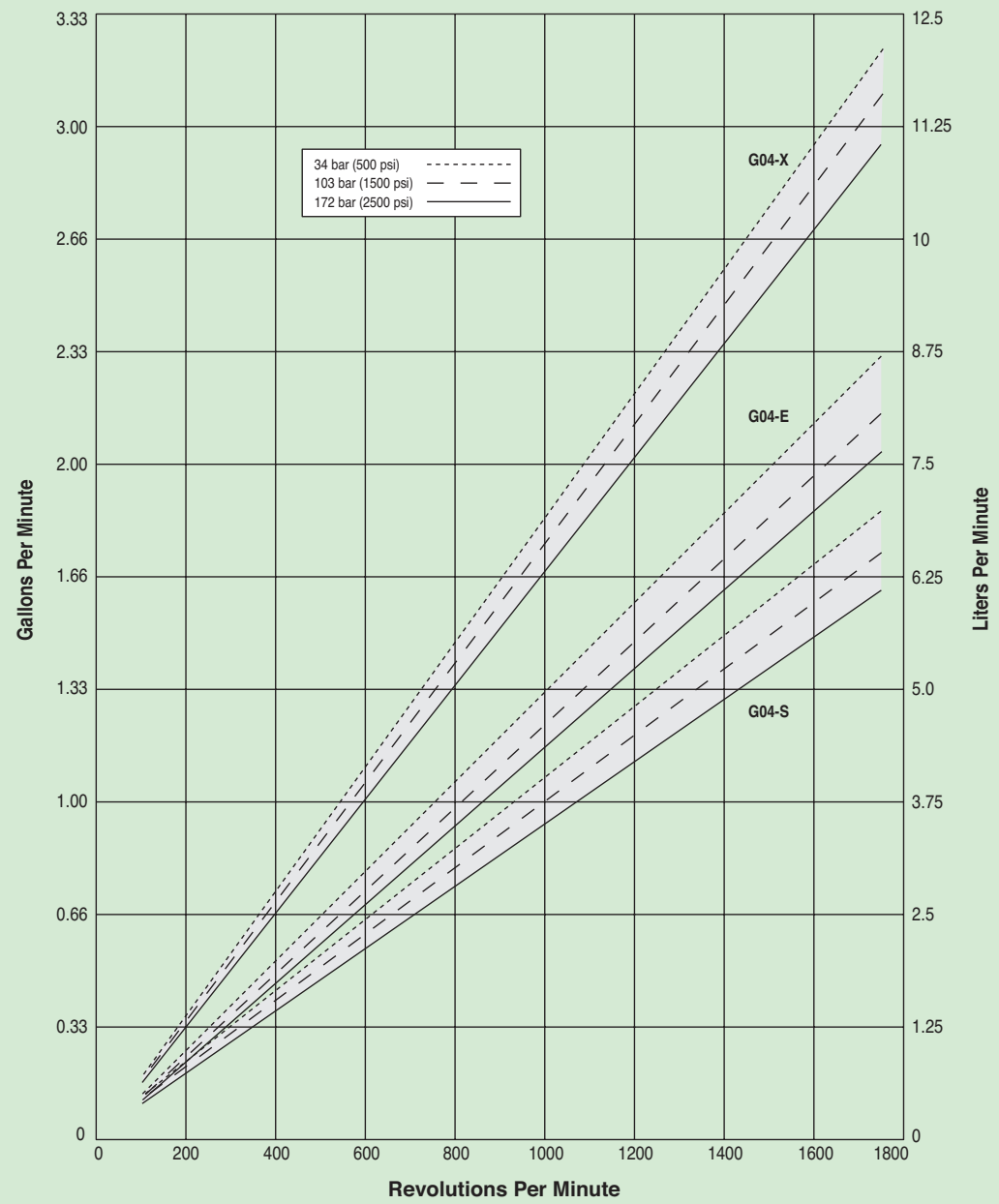

G04 Series Specifications

Flow Capacities @ 172 bar (2500 psi) 4-pole Motor @ 50 Hz			
Model	**rpm**	**gpm**	**l/min**
G04-X	1450	2.40	9.1
G04-E	1450	1.74	6.6
G04-S	1450	1.35	5.1

Flow Capacities @ 172 bar (2500 psi) 6-pole Motor @ 50 Hz			
Model	**rpm**	**gpm**	**l/min**
G04-X	960	1.58	6.0
G04-E	960	1.16	4.4
G04-S	960	0.87	3.3

Delivery

Model	**gal/rev @34 bar (500 psi)**	**@103 bar (1500 psi)**	**@172 bar (2500 psi)**
G04-X	0.0019	0.0018	0.0017
G04-E	0.0013	0.0012	0.0012
G04-S	0.0011	0.0010	0.0009

Model	**liters/rev @34 bar (500 psi)**	**@103 bar (1500 psi)**	**@172 bar (2500 psi)**
G04-X	0.0070	0.0067	0.0064
G04-E	0.0050	0.0047	0.0044
G04-S	0.0041	0.0039	0.0035

Maximum Discharge Pressure	
Metallic Heads:	172 bar (2500 psi)
Maximum Inlet Pressure	34 bar (500 psi)
Maximum Operating Temperature	
Metallic Heads:	121 °C (250 °F) - Consult factory for correct component selection for temperatures from 71 °C (160 °F) to 121 °C (250 °F).
Maximum Solids Size	200 microns
Inlet Port	1/2 inch BSPT 1/2 inch NPT 600lb ANSI RF Flange
Discharge Port	1/2 inch BSPT 1/2 inch NPT 2500lb ANSI RF Flange
Shaft Diameter	22.2 mm (7/8 inch)
Shaft Rotation	Reverse (bi-directional)
Bearings	Precision ball bearings
Oil Capacity	1.05 litres (1.1 US quarts)
Weight	37 lbs. (16.8 kg)

Calculating Required Power

$$\frac{6 \times \text{rpm}}{63{,}000} + \frac{\text{gpm} \times \text{psi}}{1{,}460} = \text{electric motor hp}$$

$$\frac{6 \times \text{rpm}}{84{,}428} + \frac{\text{l/min} \times \text{bar}}{511} = \text{electric motor kW}$$

Calculating Pulley Size

$$\frac{\text{motor pulley OD}}{\text{pump rpm}} = \frac{\text{pump pulley OD}}{\text{motor rpm}}$$

When using a variable frequency controller (VFD) calculate the hp or kW at minimum and maximum pump speed to ensure the correct hp or kW motor is selected. Note that motor manufacturers typically de-rate the service factor to 1.0 when operating with a VFD.

Net Positive Suction Head (NPSHr)

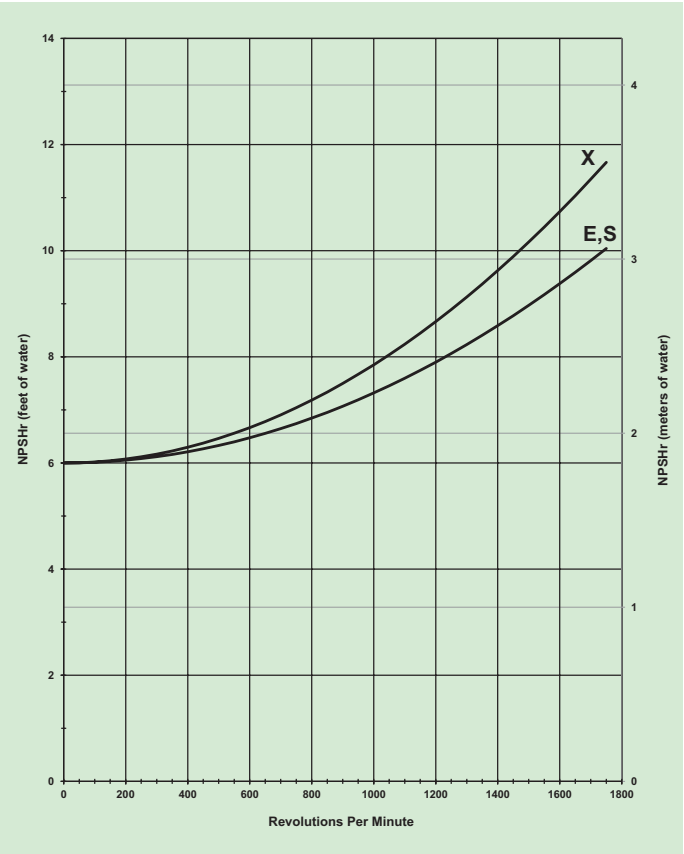

Self-priming:

Each Hydra-Cell pump has different lift capability depending on model size, cam angle, speed, and fluid characteristics. To ensure that your specific lift characteristics are met, refer to the inlet calculations regarding friction, and acceleration head losses in your Hydra-Cell Installation & Service Manual. Compare those calculations to the NPSHr curves above.

G04 Series General Assemblies

Baseplate Assembly with Motor Adaptor for IEC 100 Motor Frame

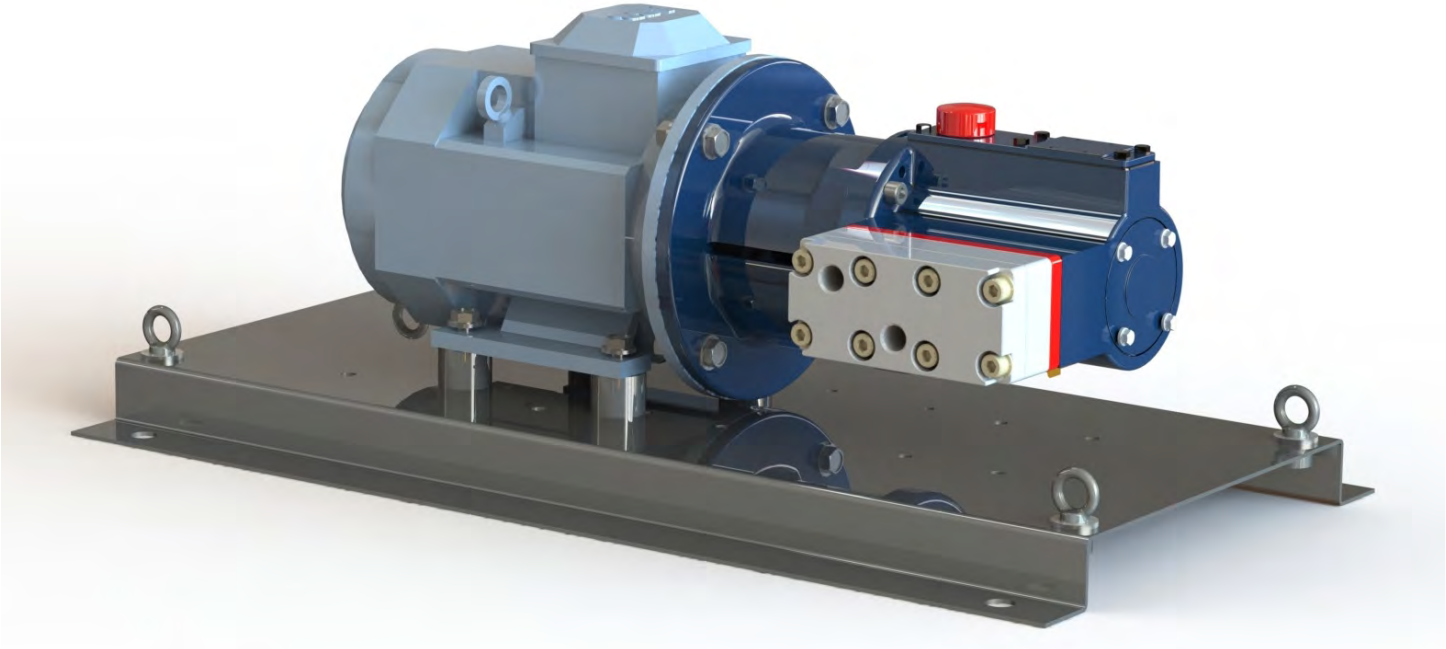

Dimensions in mm

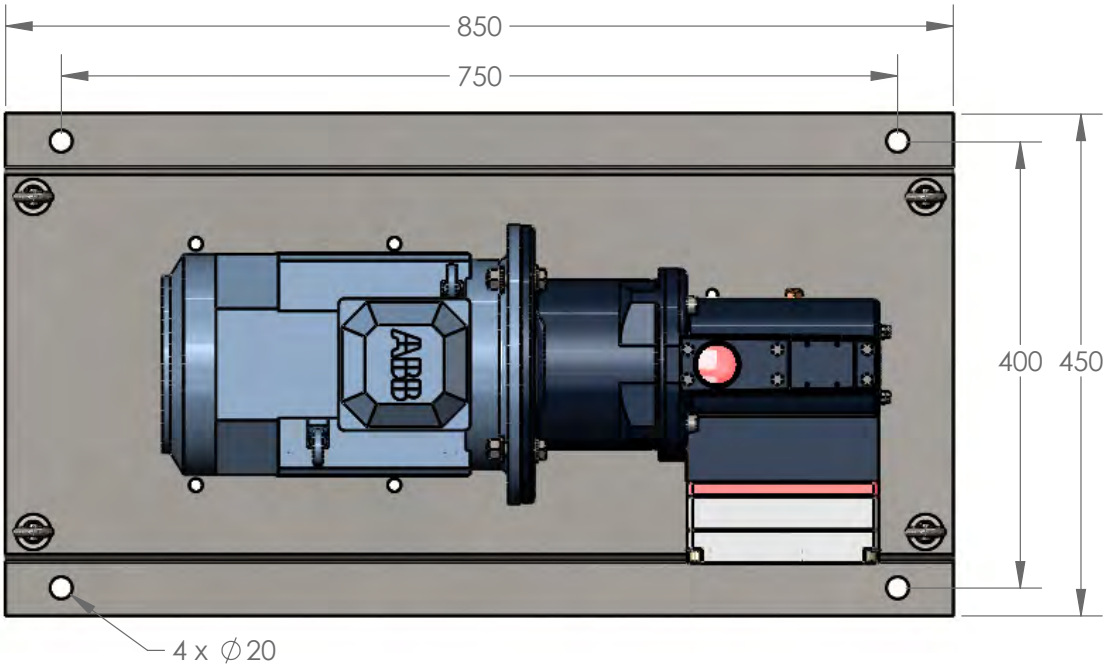

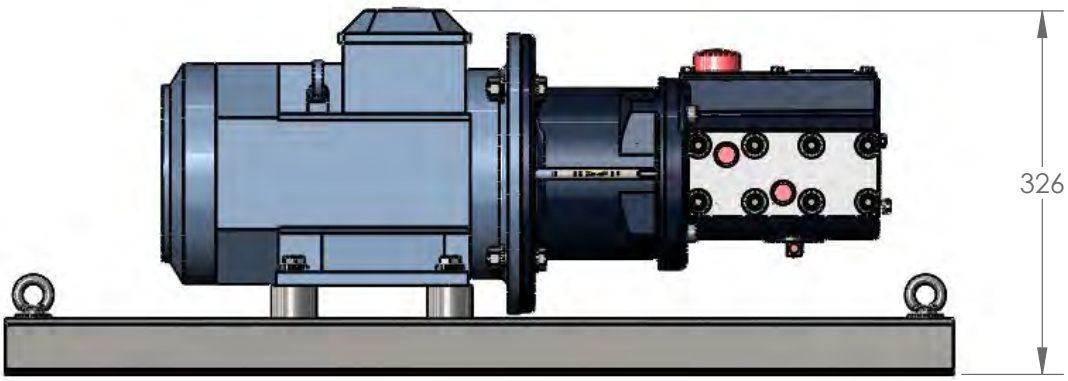

G04 Series General Assemblies

Baseplate Assembly with Motor Adaptor for IEC 132 Motor Frame

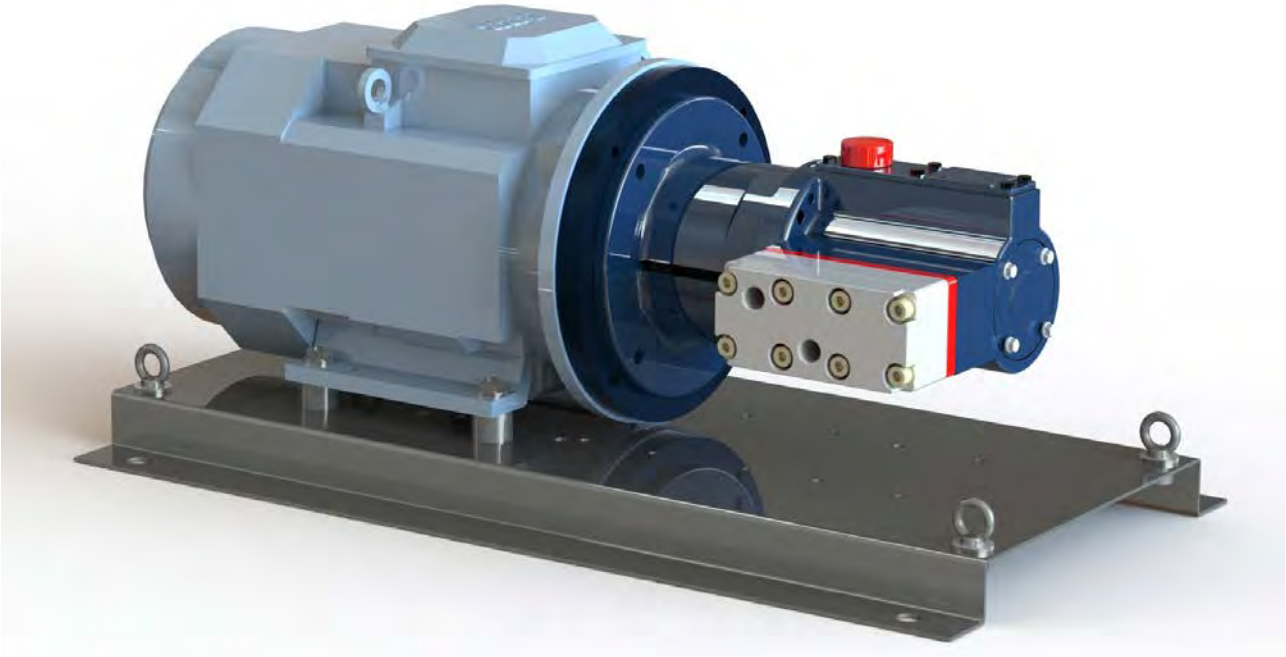

Dimensions in mm

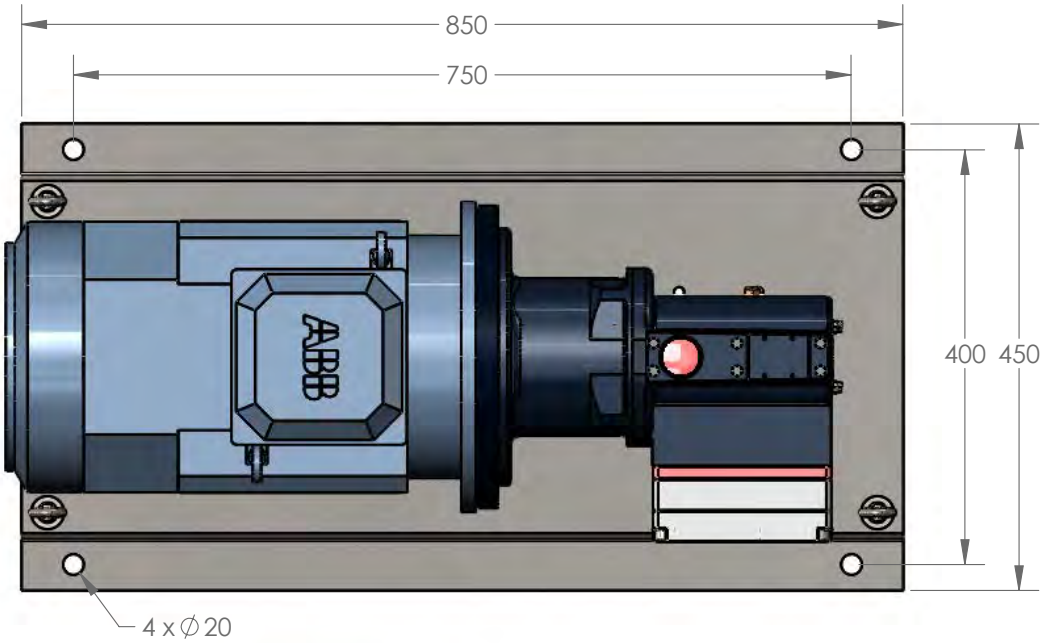

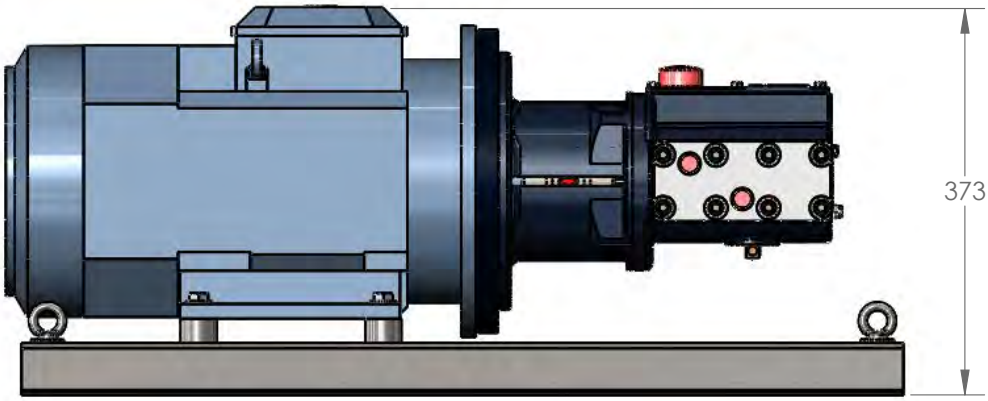

G04 Series Representative Drawings

G04 Models with Metallic Pump Head mm (Inches)

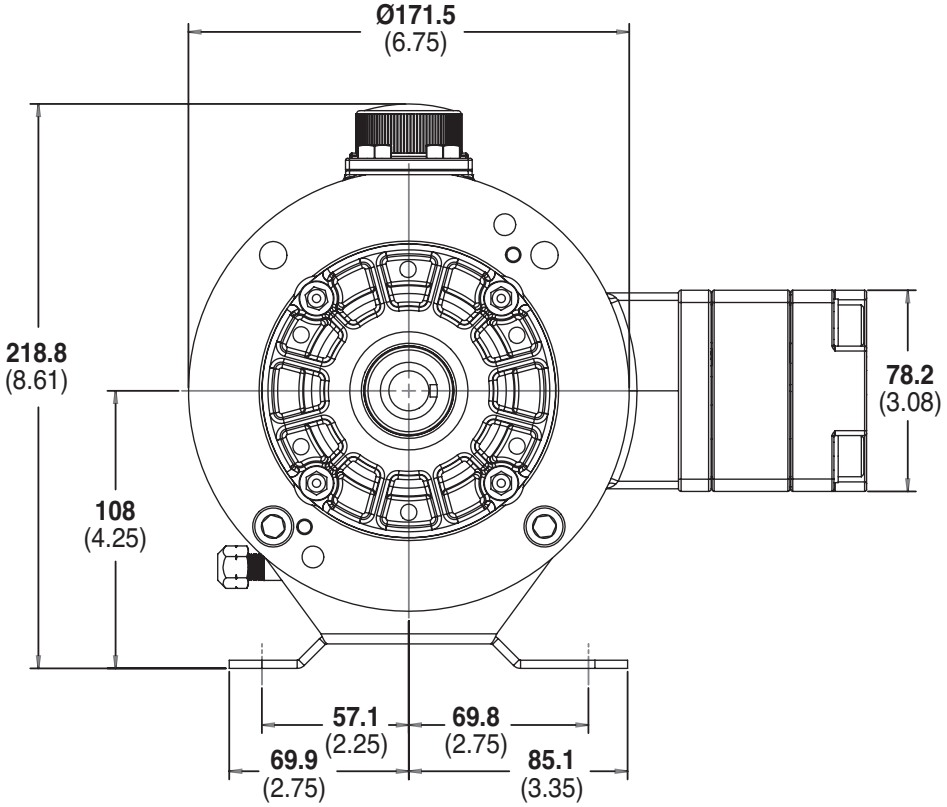

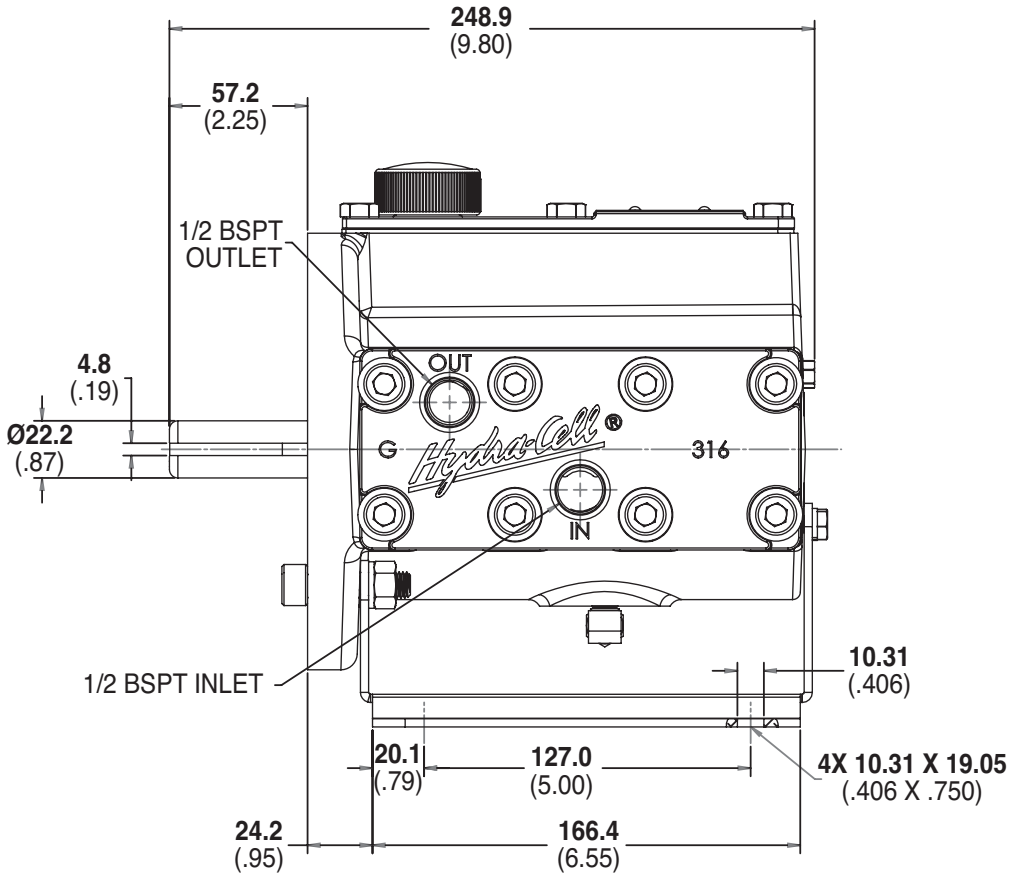

Note: *Contact factory for additional drawings of specific models and configurations.*

G04 Series Representative Drawings

G04 Models with ANSI RF Flanges mm (Inches)

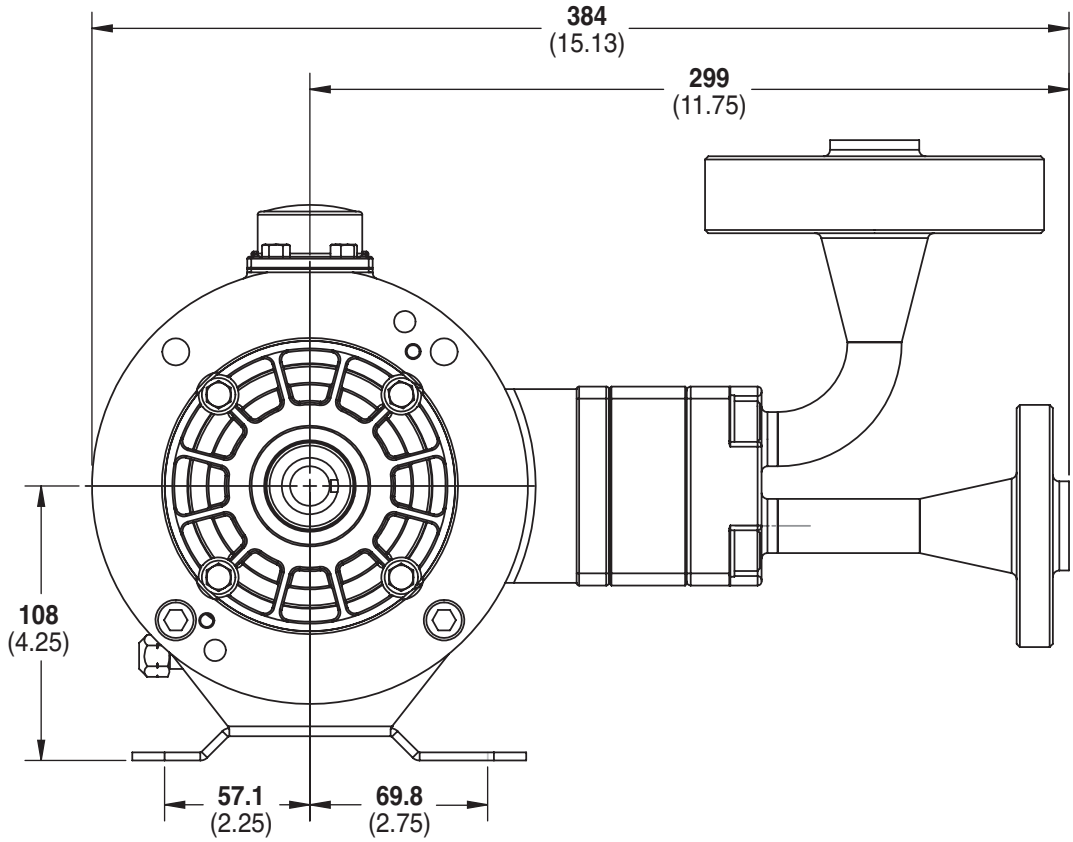

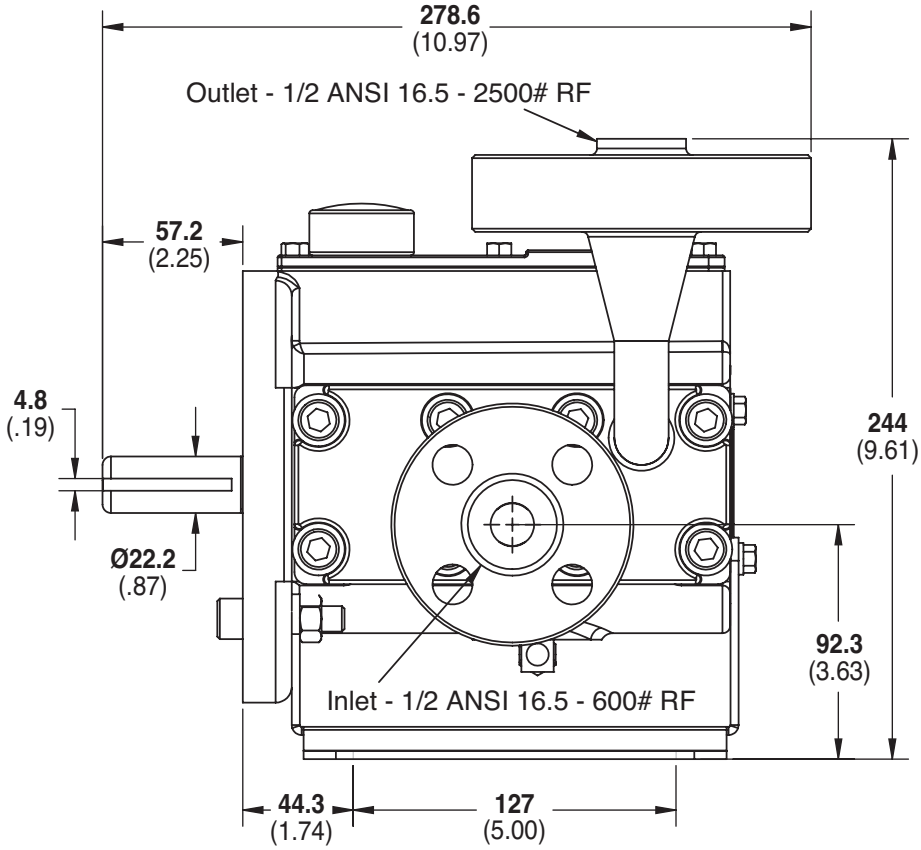

Note: *Contact factory for additional drawings of specific models and configurations.*

G04 Version 6c 02/22

G04 Series Motor Adaptors / Valves

Pump/Motor Adaptor mm (Inches)

Part Number: A04-003-1202

Must be ordered separately for G04 models for use with IEC 80 - 90 frame motors, B5 flange.

NEMA adaptor available - consult factory.

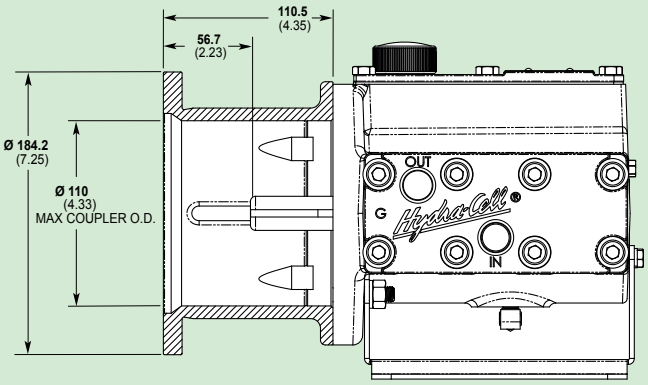

Part Number: A04-004-1202

Must be ordered separately for G04 models for use with IEC 100 - 112 frame motors, B5 flange.

NEMA adaptor available - consult factory.

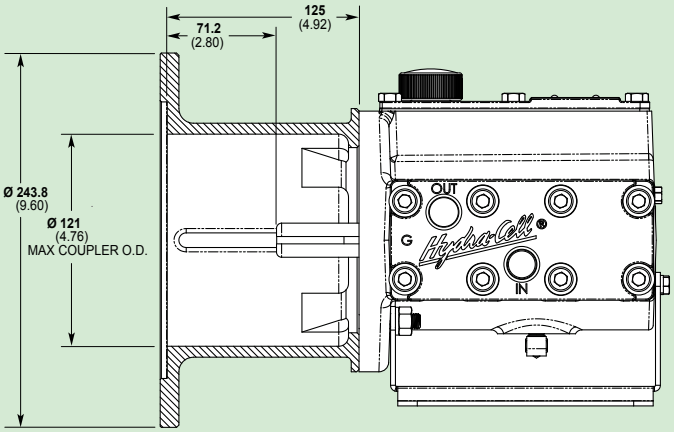

Valve Selection

A seal-less C62 Pressure Regulating Valve is recommended for Hydra-Cell G04 pumping systems, especially for high-pressure requirements or when handling dirty fluids.

G04 Series How to Order

Ordering Information

1	2	3	4	5	6	7	8	9	10	11	12
G	0	4		D							

A complete G04 Series Model Number contains 12 digits including 9 customer-specified design and materials options, for example: G04SABTHFECG.

Digit	Order Code	Description
1-3		**Pump Configuration**
	G04	Shaft-driven (BSPT Ports or ANSI Flanges)*
		*Pump/motor adaptors ordered separately. See previous page.
4		**Hydraulic End Cam**
	X	Max 9.1 l/min (2.4 gpm) @ 1450 rpm
	E	Max 6.6 l/min (1.7 gpm) @ 1450 rpm
	S	Max 5.1 l/min (1.3 gpm) @ 1450 rpm
5		**Pump Head Version**
	D	BSPT Ports
6		**Pump Head Material**
	B	Brass
	R	304 Stainless Steel
	S	316L Stainless Steel
	-	316L Stainless Steel with ANSI RF Flanges, Class 600lb x 2500lb♦
	T	Hastelloy CW12MW
		♦Selecting this option will result in a Wanner International generated Pump Code, stamped onto the pump.
7		**Diaphragm & O-ring Material**
	E	EPDM (requires EPDM-compatible oil - Digit 12 oil code J)
	G	FKM
	J	PTFE
	P	Neoprene
	T	Buna-N
8		**Valve Seat Material**
	D	Tungsten Carbide
	H	17-4 Stainless Steel
	N	Nitronic 50
	T	Hastelloy C
9		**Valve Material**
	D	Tungsten Carbide
	F	17-4 Stainless Steel
	N	Nitronic 50
	T	Hastelloy C
10		**Valve Springs**
	E	Elgiloy
	T	Hastelloy C

Digit	Order Code	Description
11		**Valve Spring Retainers**
	C	Celcon
	H	17-7 Stainless Steel
	M	PVDF
	P	Polypropylene
	T	Hastelloy C
	Y	Nylon
12		**Hydra-Oil**
	G	5W30 cold-temp severe-duty synthetic oil
	J	20-wt EPDM-compatible oil
	K	Food-contact oil

ATEX Certification Kit Options

As a separate line on your order, please add the required ATEX Certification Kit Option.

ATEX 2014/34/EU Certified, Category 2, Zone 1

ATEX 2014/34/EU Certified, Category 3, Zone 2

Notes:

All options include Certificate, Oil Level Monitor or Sight Glass, Earth Stud & Secondary ATEX Label.

Extra oil is required to fill the oil bowl during installation of ATEX pumps. This oil is not included and must be ordered separately.

G04 Series

Wanner International Ltd.™

WANNER INTERNATIONAL
UNITED KINGDOM
8 & 9 Fleet Business Park
Sandy Lane • Church Crookham
Hampshire UK GU52 8BF
t +44(0) 1252 816847
e: sales@wannerint.com

OFFICIAL UK DISTRIBUTOR:
Michael Smith Engineers Limited
web: www.michael-smith-engineers.co.uk
tel: 0800 316 7891

Wanner Engineering, Inc.™

WANNER ENGINEERING
WORLD HEADQUARTERS &
MANUFACTURING
Minneapolis USA
t+1 612-332-5681
e: sales@wannereng.com

REGIONAL OFFICE
Texas USA
t+1 940-322-7111
e: sales@wannereng.com

LATIN AMERICAN OFFICE
São Paulo, Brazil
t +55 (11) 99582-1969
e: sales@wannereng.com

Wanner Pumps Ltd.™

WANNER PUMPS
Kowloon HONG KONG
t +852 3428 6634
e: sales@wannerpumps.com

Shanghai CHINA
t +86-21-6876 3700
e: sales@wannerpumps.com

G04 Version 6c 02/22