G17 Series

Maximum Flow Rate: 58.7 l/min (15.5 gpm)
Maximum Pressure: 172 bar (2500 psi) for Metallic Pump Heads

ATEX

WANNER Hydra-Cell® Seal-less Pump Technology

G17 for vertical mounting (including motor adaptor, base plate and oil reservoir) shown with Brass pump head.

G17 Series Performance

Capacities

Model	Max. Input rpm	Flow gpm	Flow l/min	Pressure Max. Inlet Pressure	Pressure Max. Discharge Pressure
G17-X	1450	13.8	52.3	34 bar (500 psi)	34 bar (500 psi)
	1450	13.3	50.2	34 bar (500 psi)	103 bar (1500 psi)
	1450	13.0	49.2	34 bar (500 psi)	138 bar (2000 psi)
	1150	10.1	38.1	34 bar (500 psi)	172 bar 2500 psi)
G17-E	1750	15.5	58.7	34 bar (500 psi)	34 bar (500 psi)
	1750	14.8	56.2	34 bar (500 psi)	103 bar (1500 psi)
	1450	12.0	45.5	34 bar (500 psi)	138 bar (2000 psi)

Performance and specification ratings apply to G17 configurations unless specifically noted otherwise.

Metering & Dosing

API 675 Performance Characteristics of Steady State Accuracy ± 1%, Linearity ± 3% and Repeatability ± 3% can be achieved at speeds up to 1150 rpm and pressures up to 172 bar (metallic pump heads) or speeds up to 1440 rpm and pressures up to 138 bar (metallic pump heads) for X-cam pumps only.

Maximum Flow at Designated Pressure

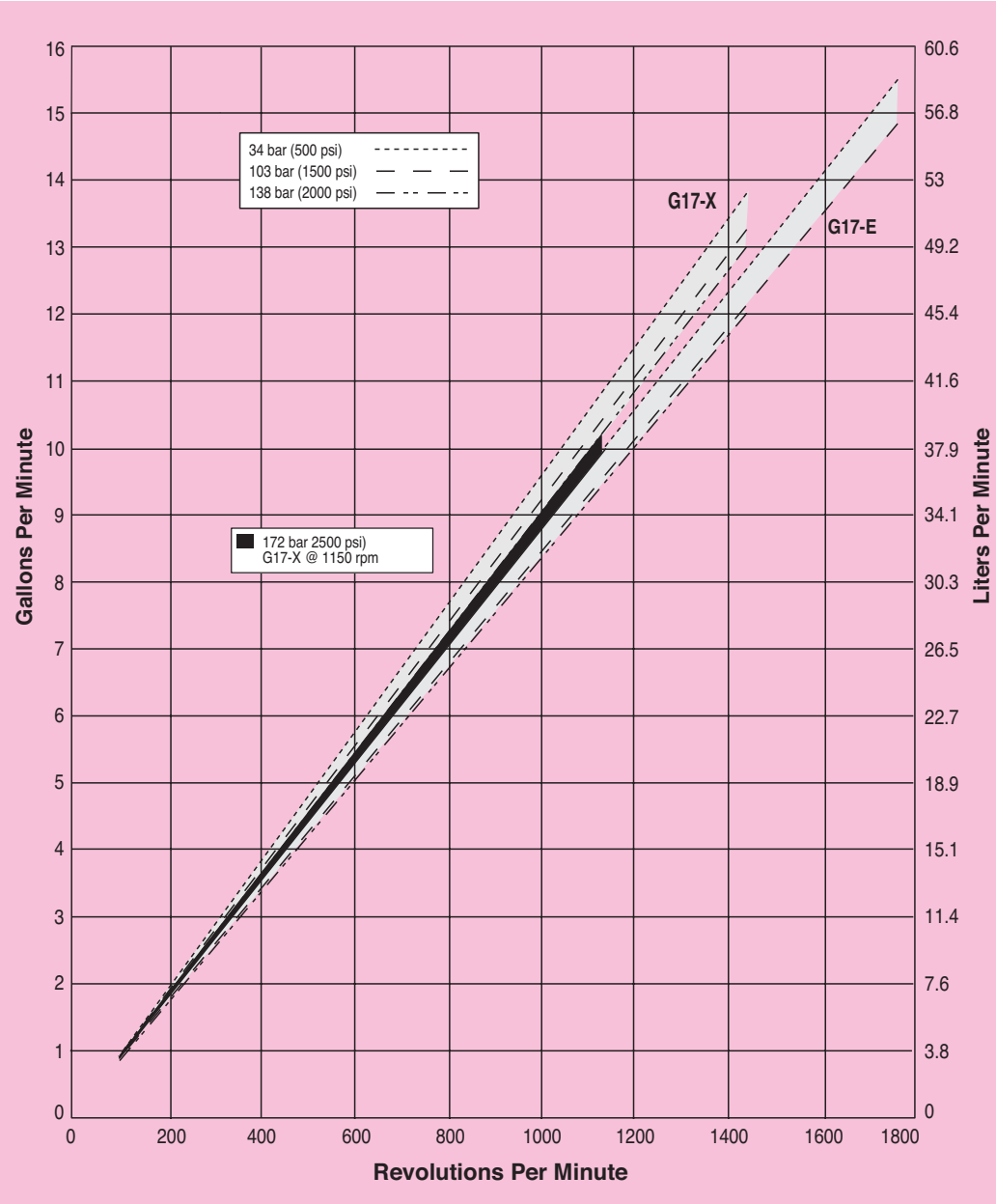

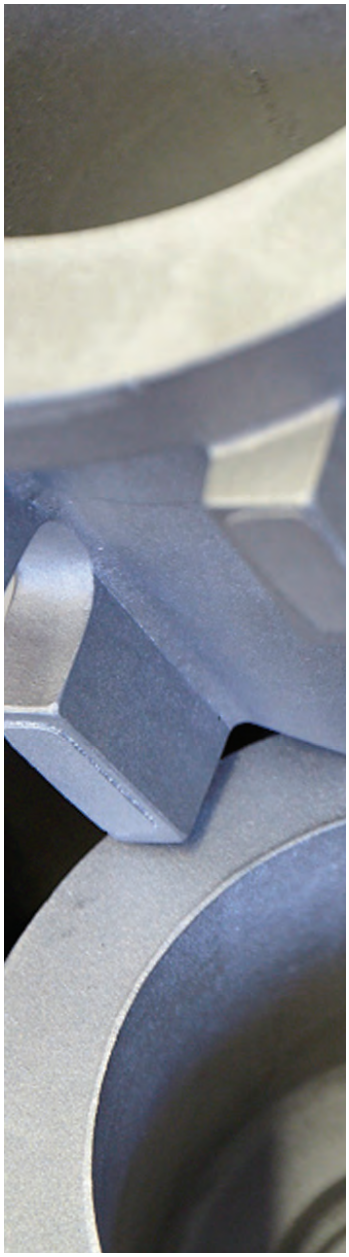

G17 Series Specifications

Flow Capacities (4-pole Motor @ 50 Hz)

Model	@ max rpm	psi	bar	gpm	l/min
G17-X	1450	500	34	13.8	52.3
	1450	1500	103	13.3	50.2
	1450	2000	138	13.0	49.2
	1150	2500	172	10.1	38.1
G17-E	1750	500	34	15.5	58.7
	1750	1500	103	14.8	56.2
	1450	2000	138	12.0	45.5

Delivery

Model	psi	bar	gal/rev	liters/rev
G17-X	500	34	0.0095	0.0360
	1500	103	0.0092	0.0346
	2000	138	0.0090	0.0339
	2500	172	0.0088	0.0331
G17-E	500	34	0.0089	0.0335
	1500	103	0.0085	0.0321
	2000	138	0.0083	0.0314

Maximum Discharge Pressure	
Metallic Heads:	103 bar (1500 psi) @1750 rpm (G17-E only)
	138 bar (2000 psi) @1450 rpm
	172 bar (2500 psi) @1150 rpm
Maximum Inlet Pressure	500 psi (34 bar)
Maximum Operating Temperature	
Metallic Heads:	121°C (250°F) - Consult factory for correct component selection for temperatures from 71°C (160°F) to 121°C (250°F).
Maximum Solids Size	500 microns
Inlet Port	1-1/4 inch BSPT 1-1/4 inch NPT
Discharge Port	3/4 inch BSPT 3/4 inch NPT
Shaft Diameter	28.58 mm (1-1/8 inch)
Shaft Rotation	Reverse (bi-directional)
Bearings	Tapered roller bearings
Oil Capacity	2.1 litres (2.2 US quarts)
Weight	
Metallic Heads:	145 lbs. (66 kg)

Calculating Required Power

$$\frac{80 \times \text{rpm}}{63{,}000} + \frac{\text{gpm} \times \text{psi}}{1{,}460 - \left(\frac{\text{psi} - 500}{20}\right)} = \text{electric motor hp}$$

$$\frac{80 \times \text{rpm}}{84{,}428} + \frac{\text{l/min} \times \text{bar}}{511 - \left(\frac{\text{bar} - 35}{4}\right)} = \text{electric motor kW}$$

When using a variable frequency controller (VFD) calculate the hp or kW at minimum and maximum pump speed to ensure the correct hp or kW motor is selected. Note that motor manufacturers typically de-rate the service factor to 1.0 when operating with a VFD.

Net Positive Suction Head (NPSHr)

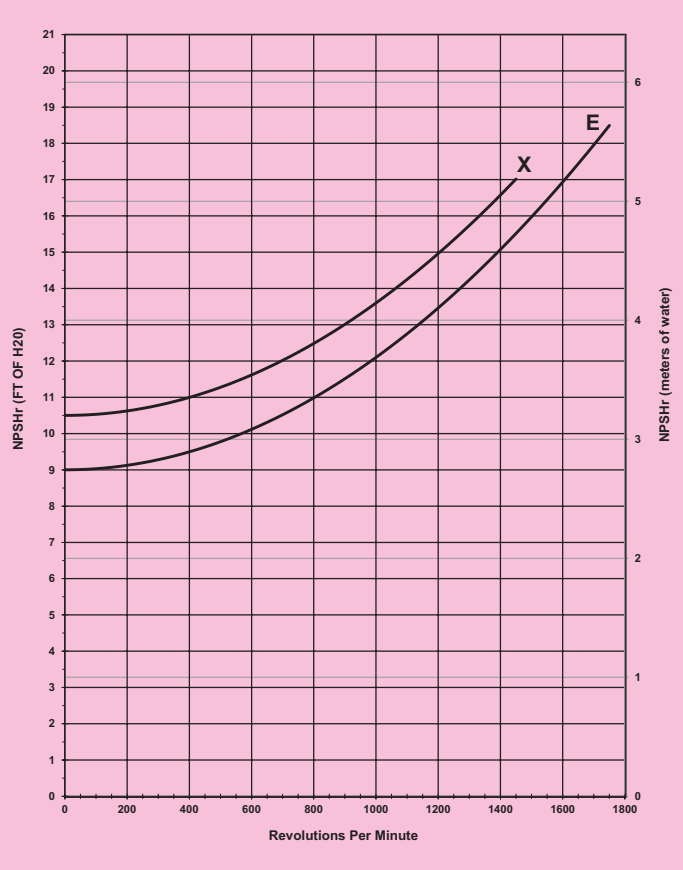

Self-priming:

Each Hydra-Cell pump has different lift capability depending on model size, cam angle, speed, and fluid characteristics. To ensure that your specific lift characteristics are met, refer to the inlet calculations regarding friction, and acceleration head losses in your Hydra-Cell Installation & Service Manual. Compare those calculations to the NPSHr curves above.

G17 Series Representative Drawings

G17 Models for Vertical Mounting mm (Inches)

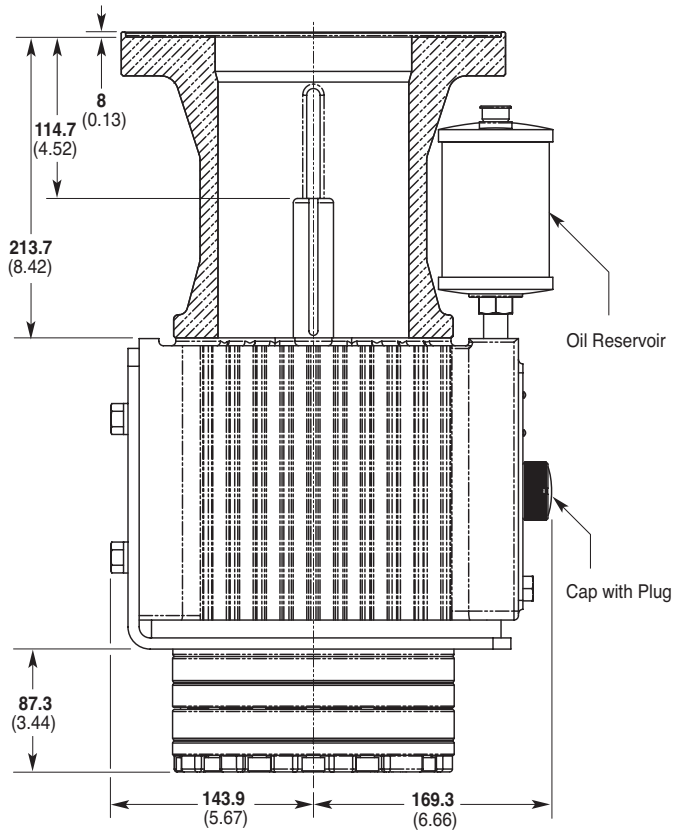

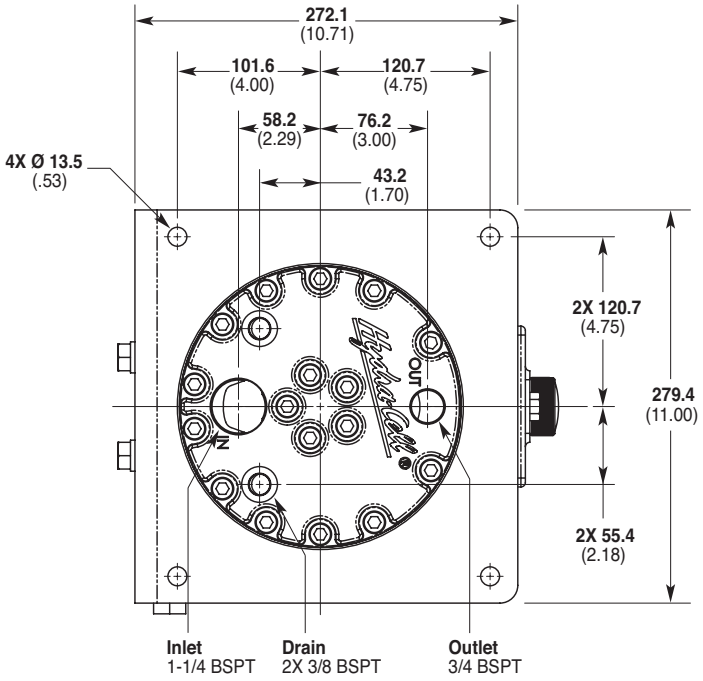

Note: *Contact factory for additional drawings of specific models and configurations.*

G17 Series Motor Adaptors / Valves

Pump/Motor Adaptor mm (Inches)

Part Number:
A04-041-1201
Must be ordered separately for use with IEC 132 frame motors, B5 flange.

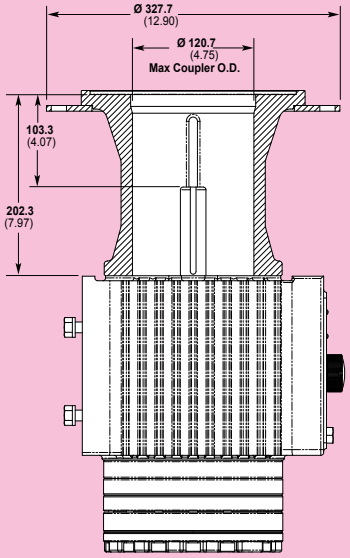

Part Number:
A04-041-1203
Must be ordered separately for use with IEC 160 frame motors, B14 flange.

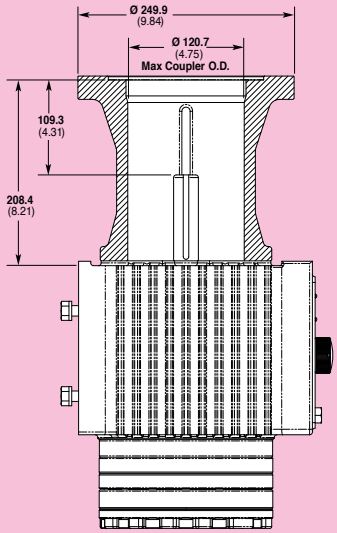

Part Number:
A04-041-1205
Must be ordered separately for use with IEC 160 - 180 frame motors, B5 flange.

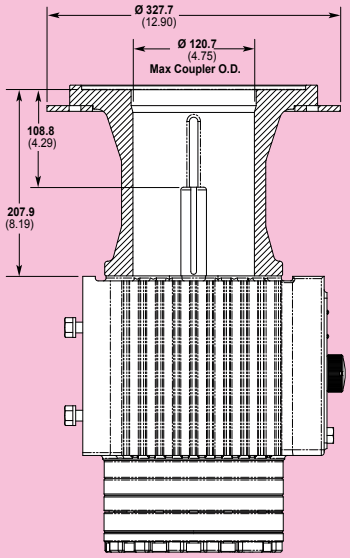

NEMA adaptors available - consult factory.

Valve Selection

A Hydra-Cell G17 Series pumping system uses a C62 Pressure Regulating Valve.

G17 Series How to Order

Ordering Information

1	2	3	4	5	6	7	8	9	10	11	12
G	1	7									

A complete G17 Series Model Number contains 12 digits including 9 customer-specified design and materials options, for example: G17XABTHFECG.

Digit	Order Code	Description
1-3		**Pump Configuration**
	G17	Vertical shaft-driven (BSPT Ports)*
		*Pump/motor adaptors ordered separately. See previous page.
4		**Hydraulic End Cam**
	X	Max 48.0 l/min (12.7 gpm) @ 1450 rpm
	E	Max 43.5 l/min (11.5 gpm) @ 1450 rpm
5		**Pump Head Version**
	D	BSPT Ports
6		**Pump Head Material**
	B	Brass
	G	Duplex Alloy 2205
	S	316L Stainless Steel
7		**Diaphragm & O-ring Material**
	A	Aflas diaphragm / PTFE o-ring
	G	FKM
	T	Buna-N
8		**Valve Seat Material**
	D	Tungsten Carbide
	H	17-4 Stainless Steel
	N	Nitronic 50
9		**Valve Material**
	D	Tungsten Carbide
	F	17-4 Stainless Steel
	N	Nitronic 50
10		**Valve Springs**
	E	Elgiloy
	H	17-7 Stainless Steel
	T	Hastelloy C
11		**Valve Spring Retainers**
	C	Celcon
	H	17-7 Stainless Steel
	M	PVDF
	P	Polypropylene
	Y	Nylon (Zytel)

Digit	Order Code	Description
12		**Hydra-Oil**
	A	10W30 standard-duty oil
	B	40-wt for continuous-duty (use with 316L SST pump head - standard)
	E	Food-contact oil
	G	5W30 cold-temp severe-duty synthetic oil
	H	15W50 high-temp severe-duty synthetic oil

WANNER ENGINEERING - WORLD HEADQUARTERS & MANUFACTURING
Minneapolis USA
t: (612) 332-5681
e: sales@wannereng.com

WANNER PUMPS
Kowloon HONG KONG
t: +852 3428 6534
e: sales@wannerpumps.com

WANNER INTERNATIONAL
Hampshire UK
t: +44 (0) 1252 816847
e: sales@wannerint.com

WANNER ENGINEERING
Latin American Office
t: +55 (11) 4081-7098
e: sales@wannereng.com

WANNER PUMPS
Shanghai CHINA
t: +86-21-6876 3700
e: sales@wannerpumps.com

G17 Version 5 10/16

OFFICIAL UK DISTRIBUTOR:
Michael Smith Engineers Limited
www.michael-smith-engineers.co.uk
freephone: 0800 316 7891

www.hydra-cell.eu