G35 Series

API 674

ATEX

Maximum Flow Rate: 138 l/min (36.5 gpm)
Maximum Pressure: 83 bar (1200 psi) for Metallic Pump Heads
17 bar (250 psi) for Non-metallic Pump Heads

WANNER Hydra-Cell® Seal-less Pump Technology

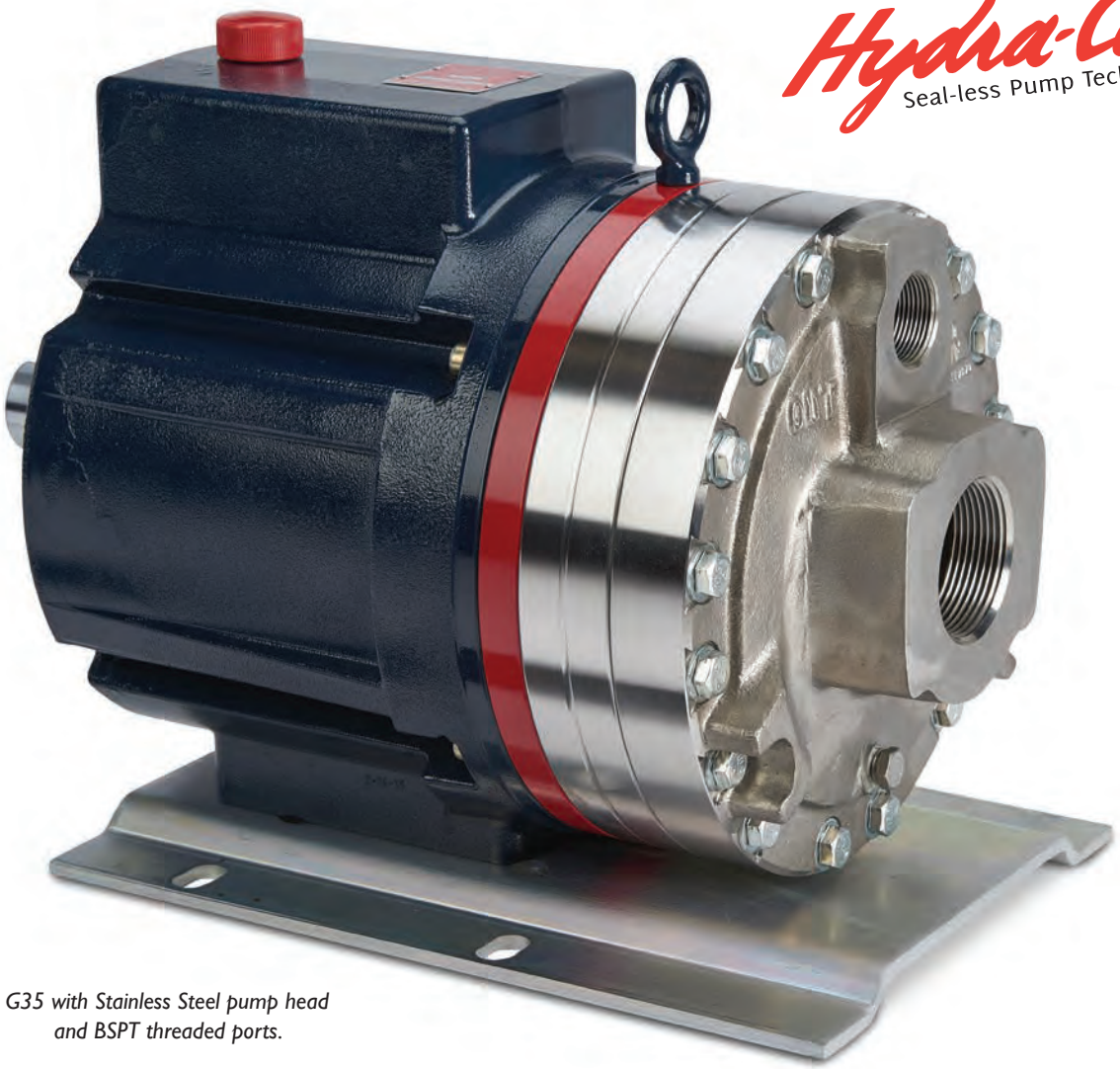

G35 with Stainless Steel pump head and BSPT threaded ports.

G35 with Cast Iron pump head.

G35 with Polypropylene pump head.

G35 with Brass pump head.

G35 Series Performance

Capacities

Flow

Model	Max. Input rpm	Max. Flow @ 83 bar (1200 psi) gpm	l/min
G35-X	1050	36.5	138
G35-E	1150	34.0	129

Performance and specification ratings apply to G35 configurations unless specifically noted otherwise.

Pressure

Maximum Inlet Pressure

34 bar (500 psi) with 83 bar (1200 psi) max. discharge pressure
3.5 bar (50 psi) Polypropylene

Maximum Discharge Pressure

Metallic Heads:
83 bar (1200 psi) @ 1050 rpm max. (X cam)
83 bar (1200 psi) @ 1150 rpm max. (E cam)
Non-metallic Heads:
17 bar (250 psi) Polypropylene

Metering & Dosing

API 675 Performance Characteristics of Steady State Accuracy ±1%, Linearity, ±3% and Repeatability ±3% can be achieved at speeds up to 1050 rpm and pressures up to 83 bar (metallic pump heads) for X-cam pumps only.

Available to Meet API 674

Please contact Wanner International for further information.

Maximum Flow at Designated Pressure

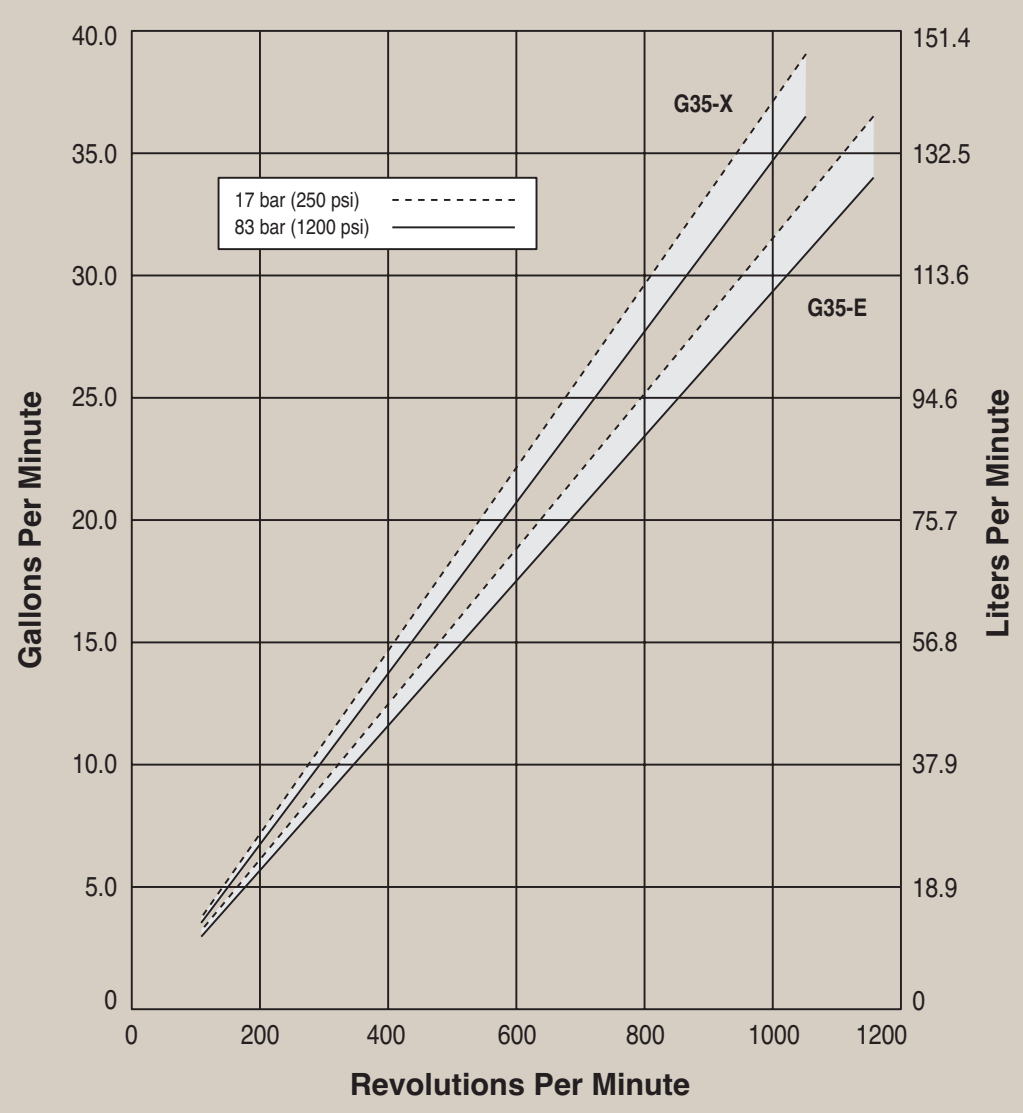

G35 Series Specifications

Flow Capacities @ 83 bar (1200 psi) 6-pole Motor @ 50 Hz

Model	rpm	gpm	l/min
G35-X	960	33.50	127.00
G35-E	960	29.00	110.00

Flow Capacities @ 83 bar (1200 psi) 8-pole Motor @ 50 Hz

Model	rpm	gpm	l/min
G35-X	730	25.50	96.60
G35-E	730	22.10	83.60

Delivery @ 83 bar (1200 psi)

Model	gal/rev	liters/rev
G35-X	0.0347	0.1314
G35-E	0.0296	0.1120

Maximum Discharge Pressure	
Metallic Heads:	83 bar (1200 psi) @ 1050 rpm max. (X cam)
	83 bar (1200 psi) @ 1150 rpm max. (E cam)
Non-metallic Heads:	17 bar (250 psi) Polypropylene
Maximum Inlet Pressure	
Metallic Heads:	34 bar (500 psi)
Non-metallic Heads:	3.5 bar (50 psi)
Maximum Operating Temperature	
Metallic Heads:	121 °C (250 °F) - Consult factory for correct component selection for temperatures from 71 °C (160 °F) to 121 °C (250 °F).
Non-metallic Heads:	49 °C (120 °F) Polypropylene
Maximum Solids Size	800 microns
Inlet Port	
Metallic Heads:	2-1/2 inch BSPT
	2-1/2 inch NPT
	150lb or 600lb ANSI RF Flange
	3 inch SAE
Non-metallic Heads:	2-1/2 inch SAE J518
Discharge Port	
Metallic Heads:	1-1/4 inch BSPT
	1-1/4 inch NPT
	600lb or 1500lb ANSI RF Flange
	1-1/4 inch SAE
Non-metallic Heads:	1-1/2 inch SAE J518
Shaft Diameter	50.8 mm (2 inch)
Shaft Rotation	Reverse (bi-directional)
Bearings	Tapered roller bearings
Oil Capacity	7.3 litres (7.75 US quarts)
Weight	
Metallic Heads:	116.6 kg (257 lbs.)
Non-metallic Heads:	87.6 kg (193 lbs.)

Calculating Required Power

$$\frac{100 \times \text{rpm}}{63{,}000} + \frac{\text{gpm} \times \text{psi}}{1{,}460} = \text{electric motor hp}$$

$$\frac{100 \times \text{rpm}}{84{,}428} + \frac{\text{l/min} \times \text{bar}}{511} = \text{electric motor kW}$$

Calculating Pulley Size

$$\frac{\text{motor pulley OD}}{\text{pump rpm}} = \frac{\text{pump pulley OD}}{\text{motor rpm}}$$

When using a variable frequency controller (VFD) calculate the hp or kW at minimum and maximum pump speed to ensure the correct hp or kW motor is selected. Note that motor manufacturers typically de-rate the service factor to 1.0 when operating with a VFD.

Net Positive Suction Head (NPSHr)

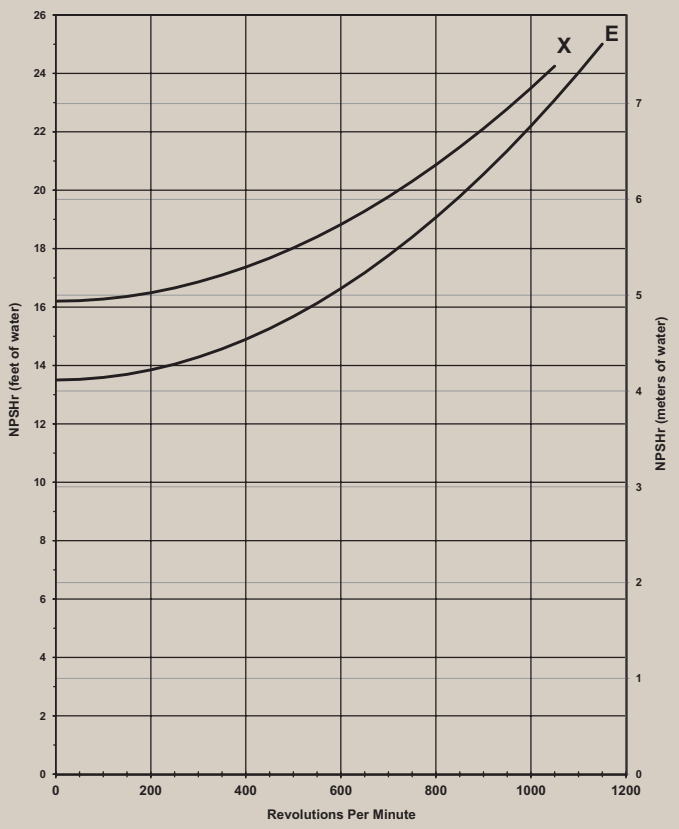

Note: Positive inlet pressure required with PTFE diaphragms.

Self-priming:

Each Hydra-Cell pump has different lift capability depending on model size, cam angle, speed, and fluid characteristics. To ensure that your specific lift characteristics are met, refer to the inlet calculations regarding friction, and acceleration head losses in your Hydra-Cell Installation & Service Manual. Compare those calculations to the NPSHr curves above.

G35 Series General Assemblies

Baseplate Assembly Long-coupled for IEC 132 Motor Frame

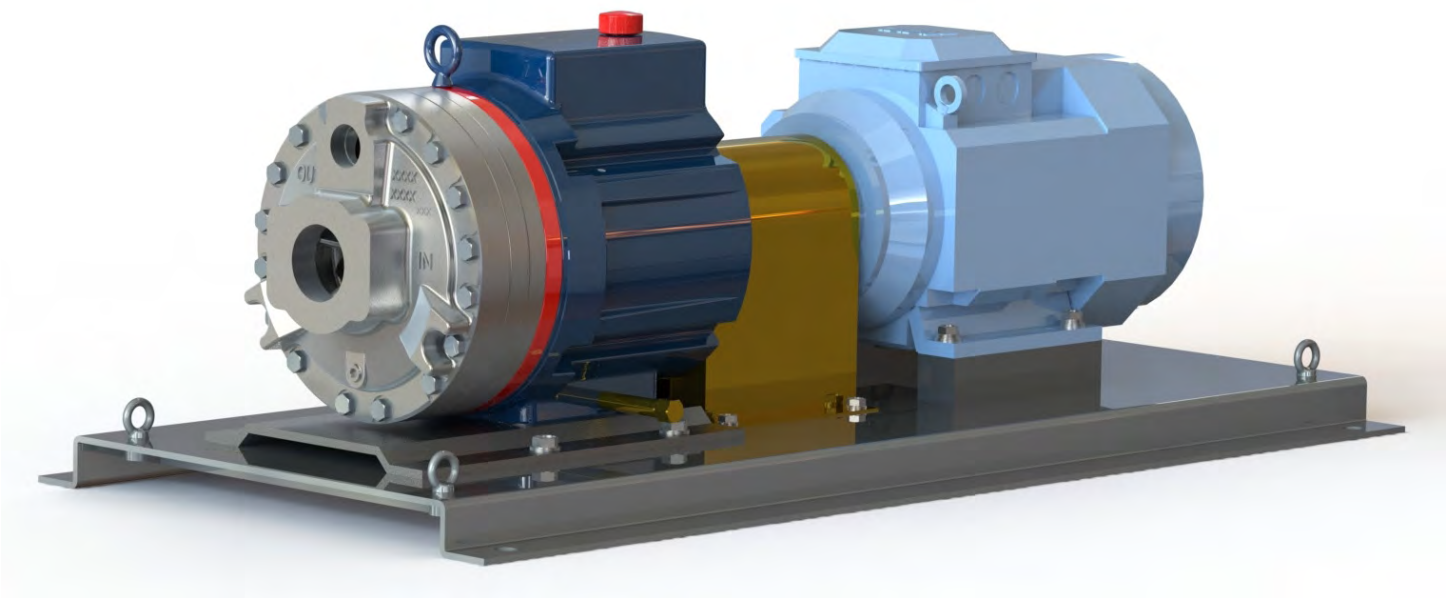

Dimensions in mm

G35 - IEC 132

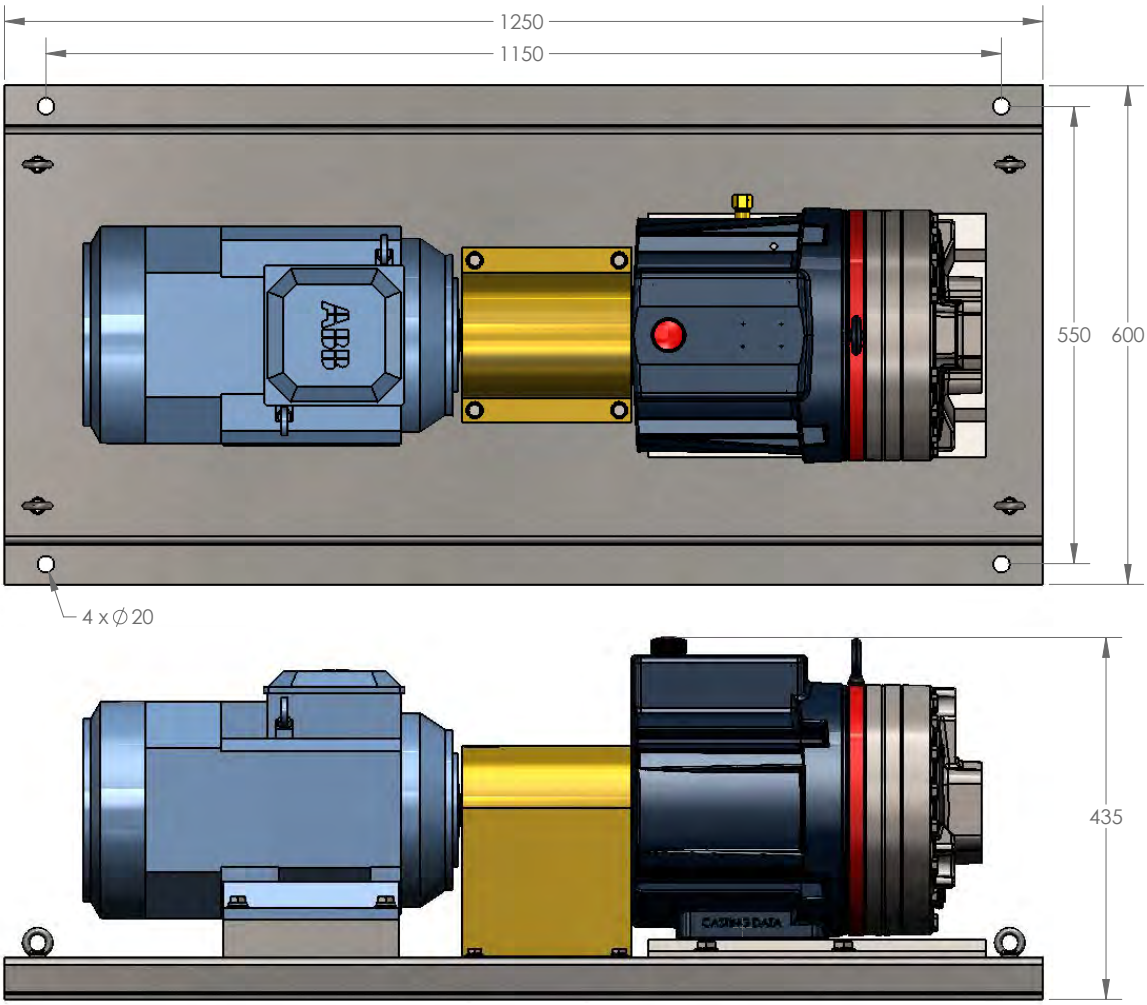

Unit Weight Approx - 261 Kg

G35 Series General Assemblies

Baseplate Assembly Long-coupled for IEC 160 Motor Frame

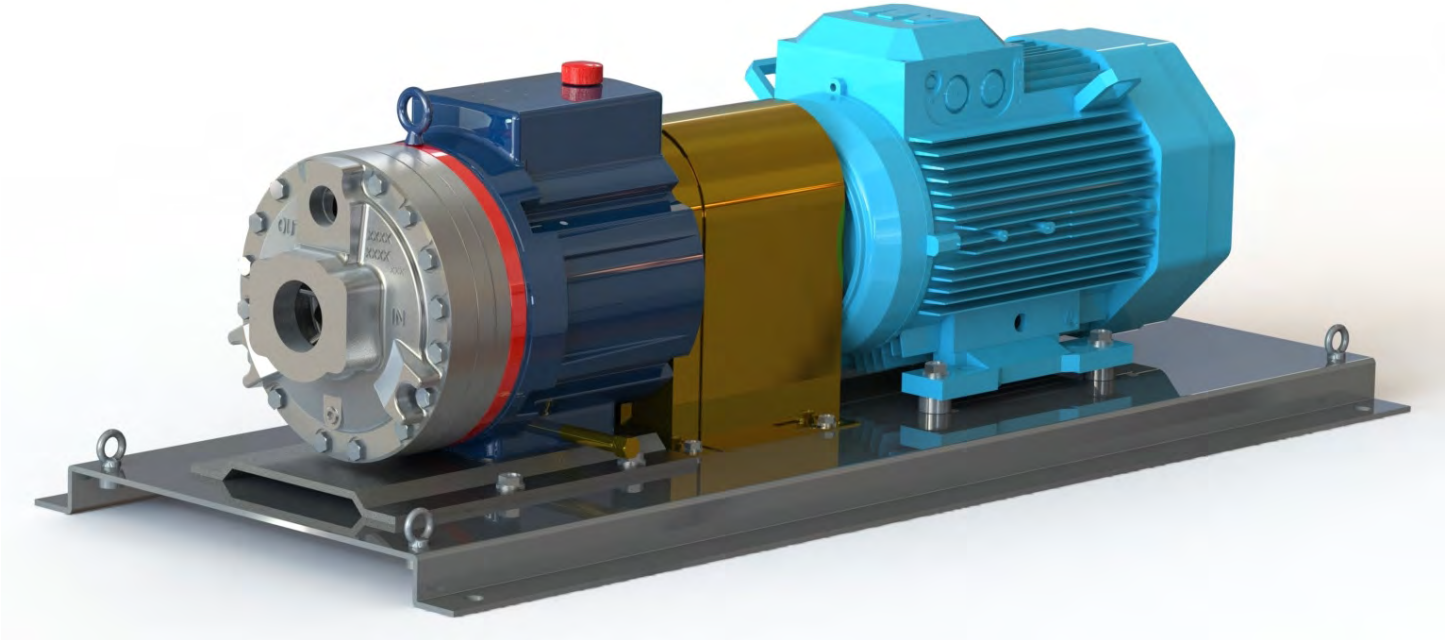

Dimensions in mm

G35 - IEC 160

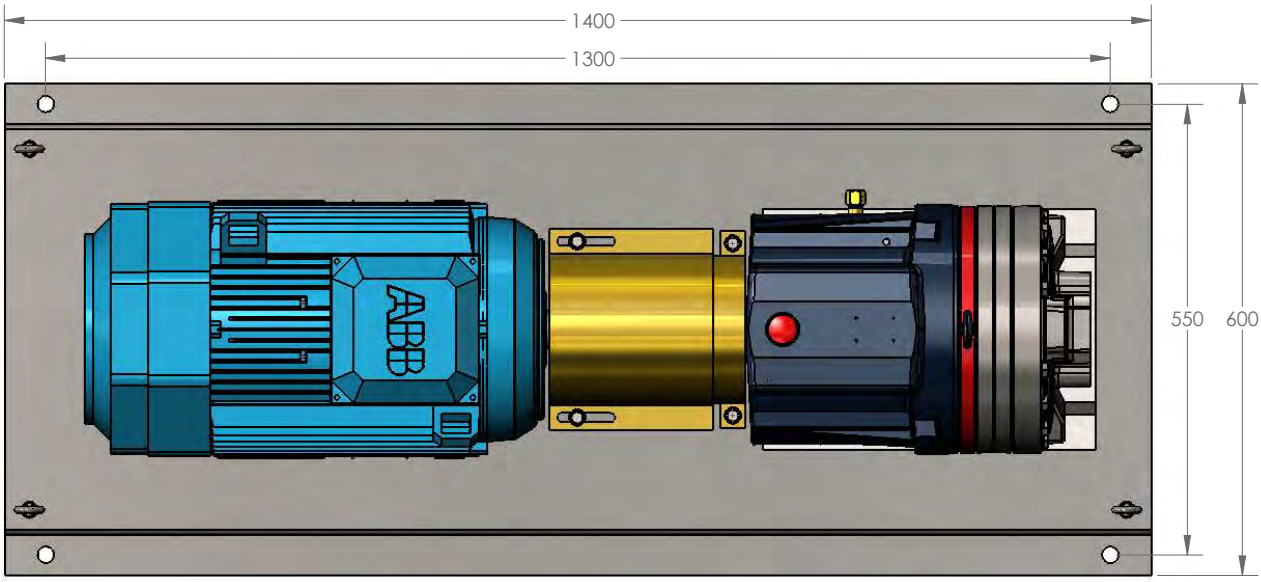

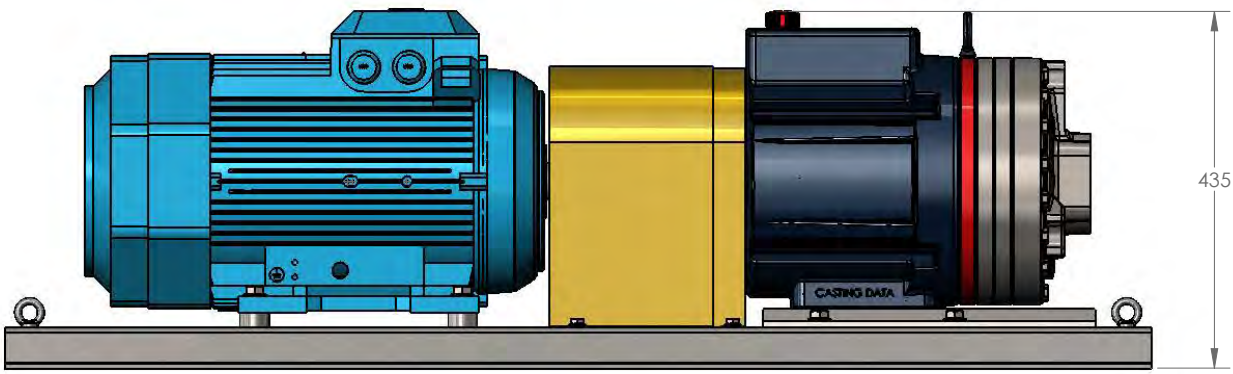

Unit Weight Approx - 358 Kg

G35 Series General Assemblies

Baseplate Assembly Long-coupled for IEC 180 Motor Frame

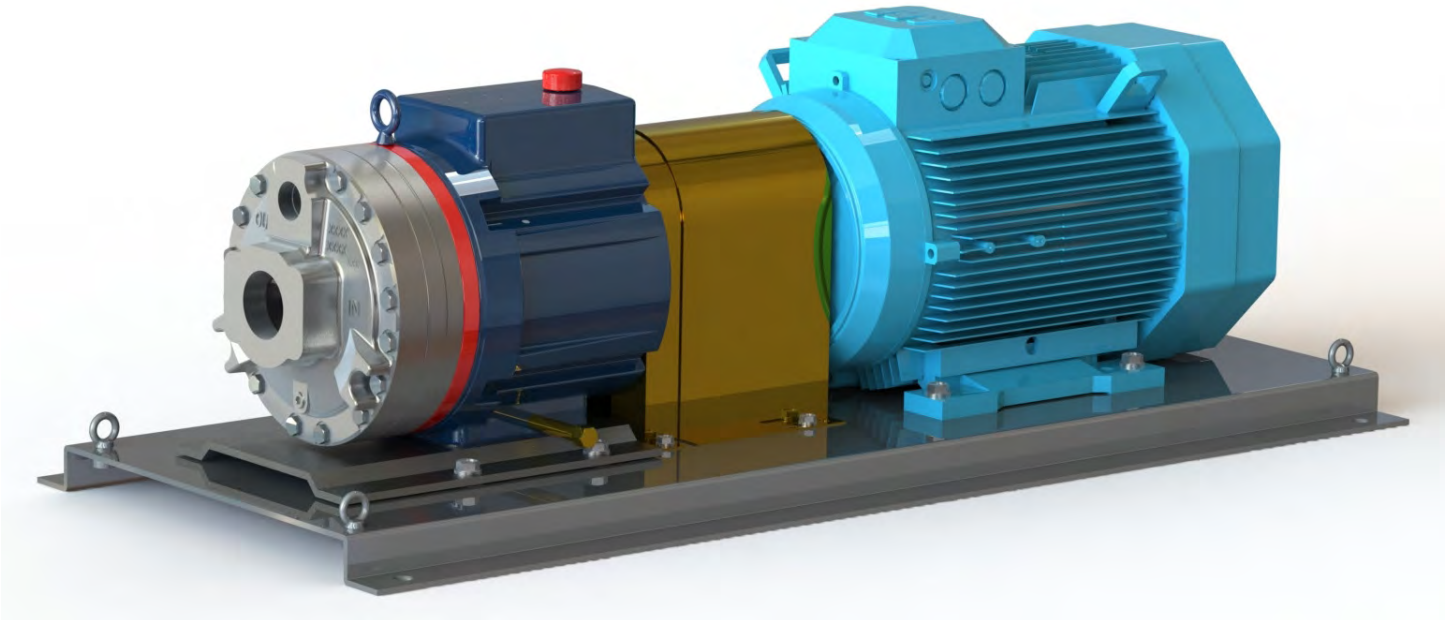

Dimensions in mm

G35 - IEC 180

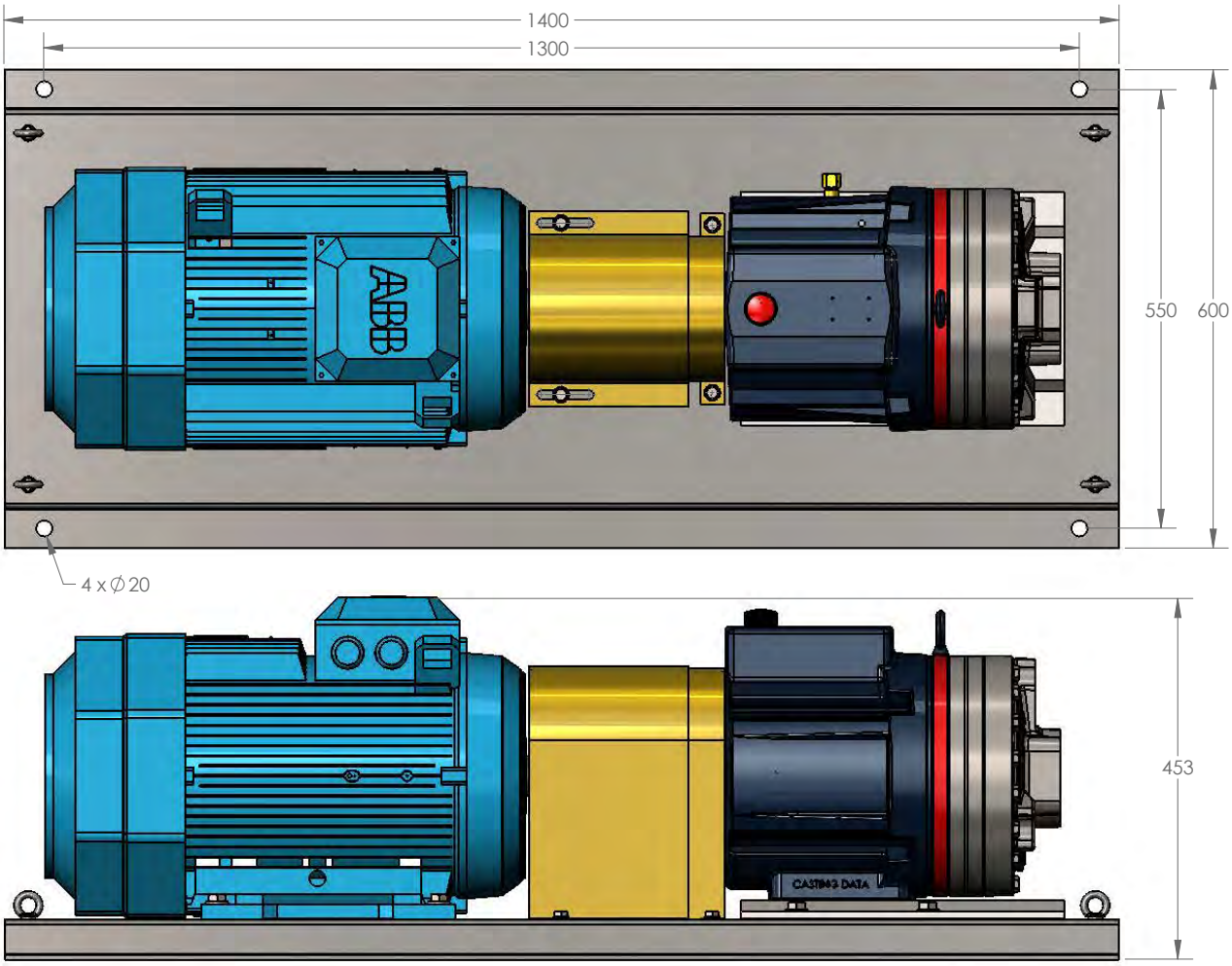

Unit Weight Approx - 393 Kg

G35 Series General Assemblies

Baseplate Assembly Long-coupled for IEC 200 Motor Frame

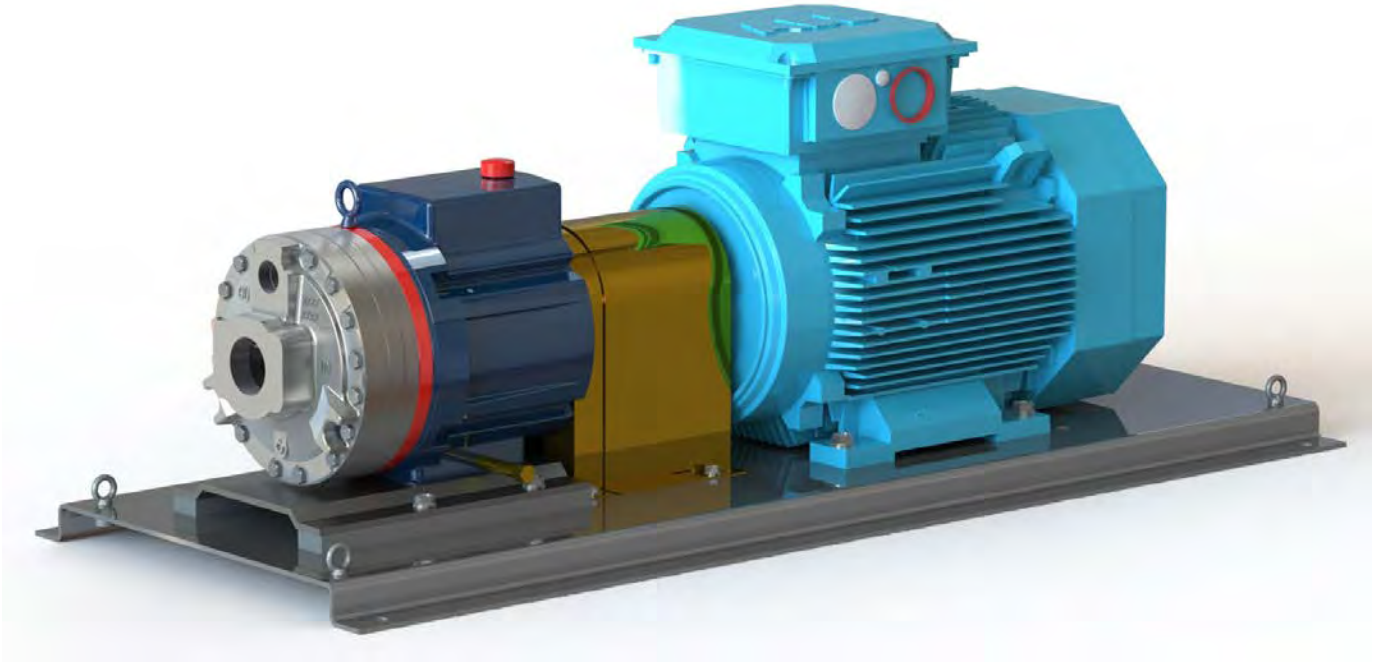

Dimensions in mm

G35 - IEC 200

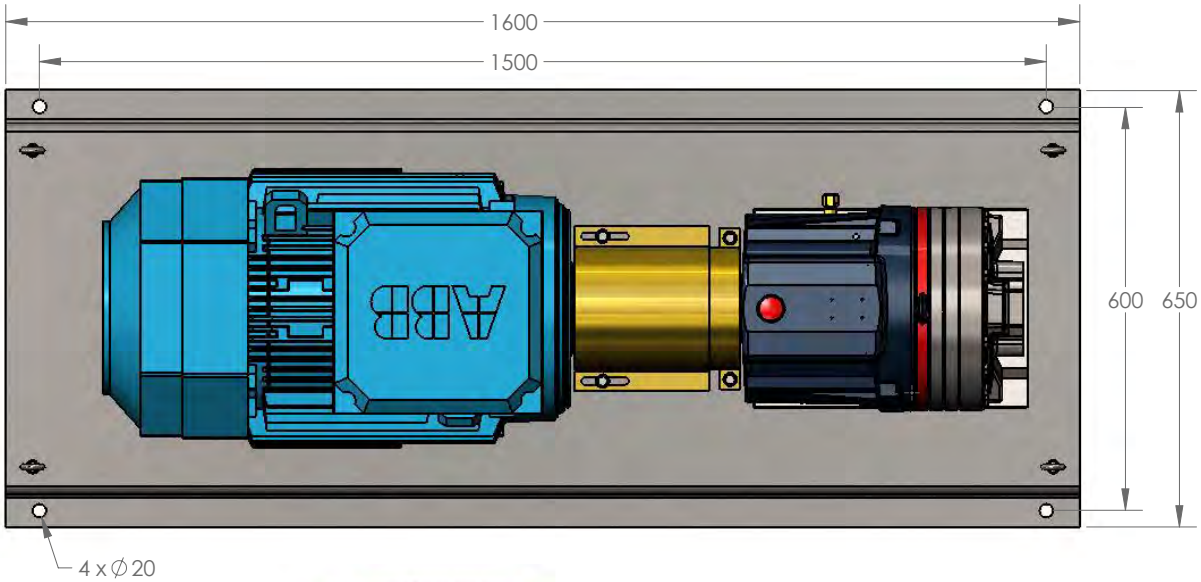

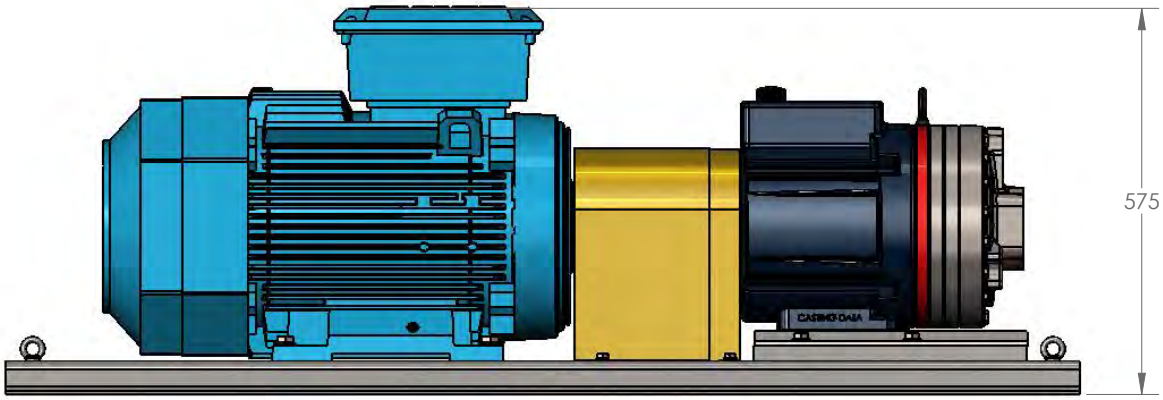

Unit Weight Approx - 488 Kg

G35 Series General Assemblies

Baseplate Assembly Long-coupled for IEC 225 Motor Frame

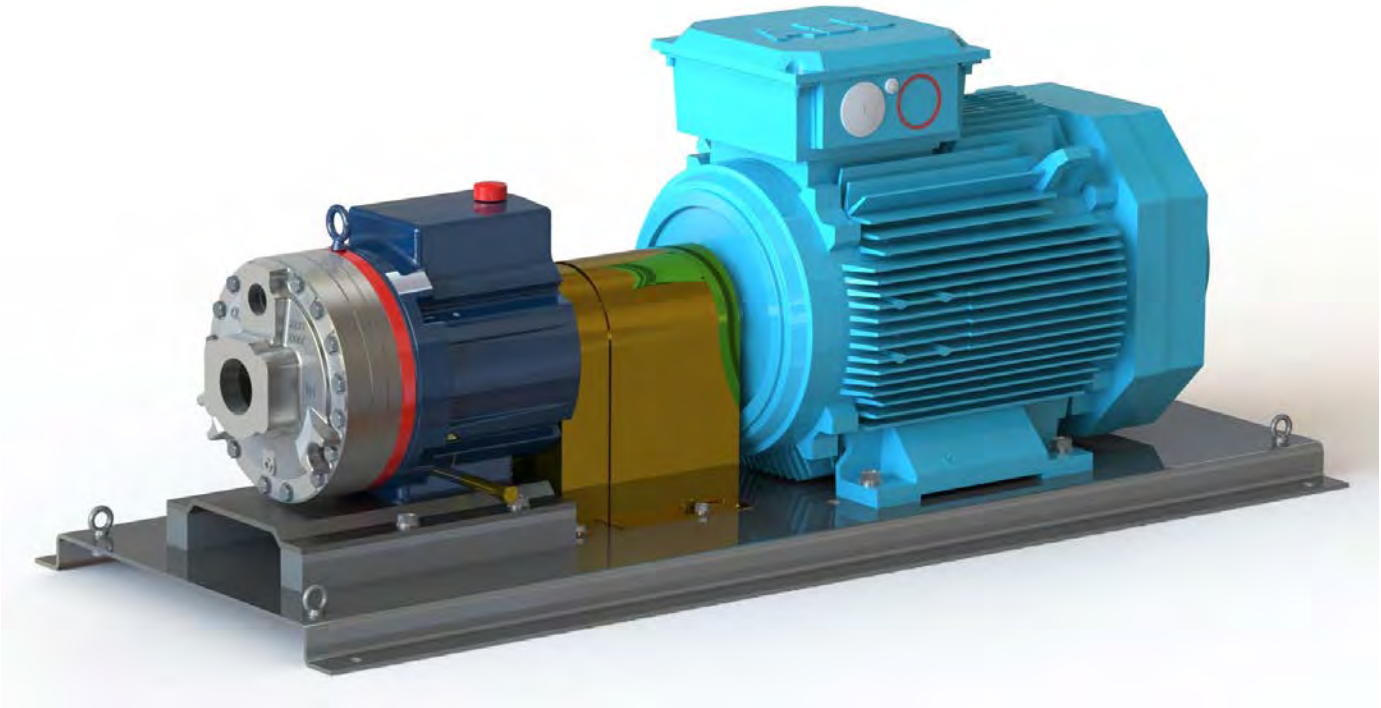

Dimensions in mm

G35 - IEC 225

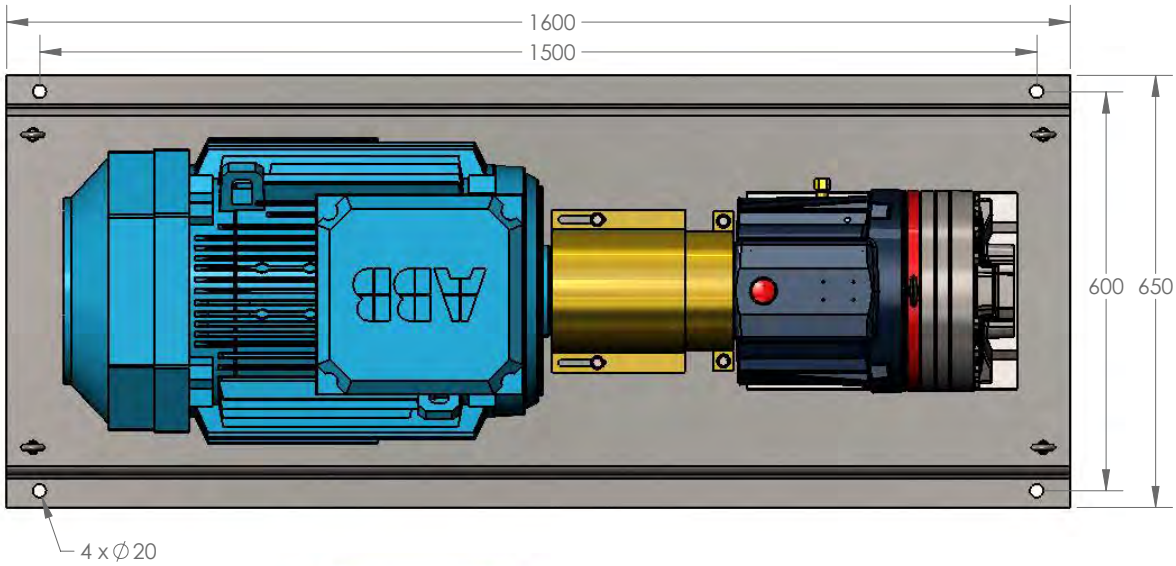

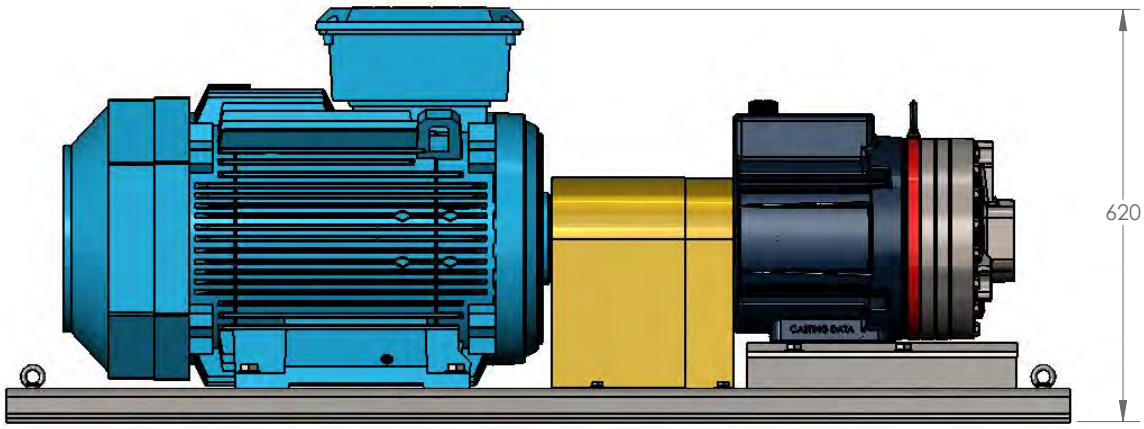

Unit Weight Approx - 546 Kg

G35 Series Representative Drawings

G35 Models with BSPT Inlet/Outlet Ports mm (Inches)

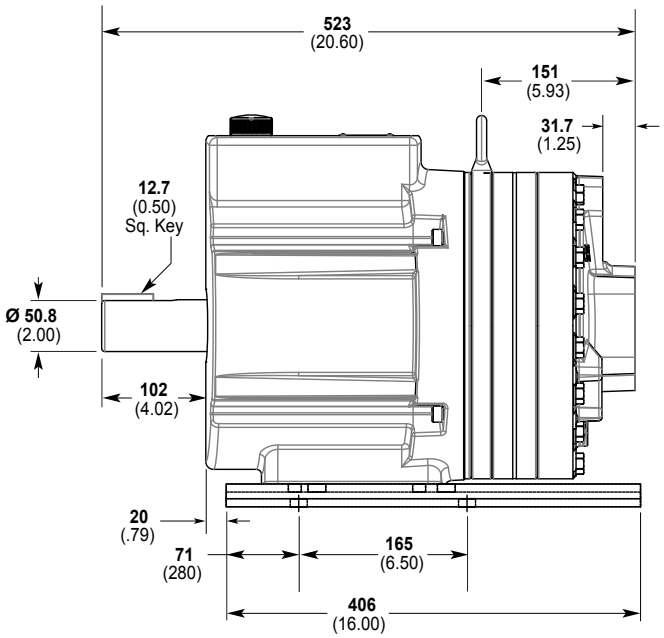

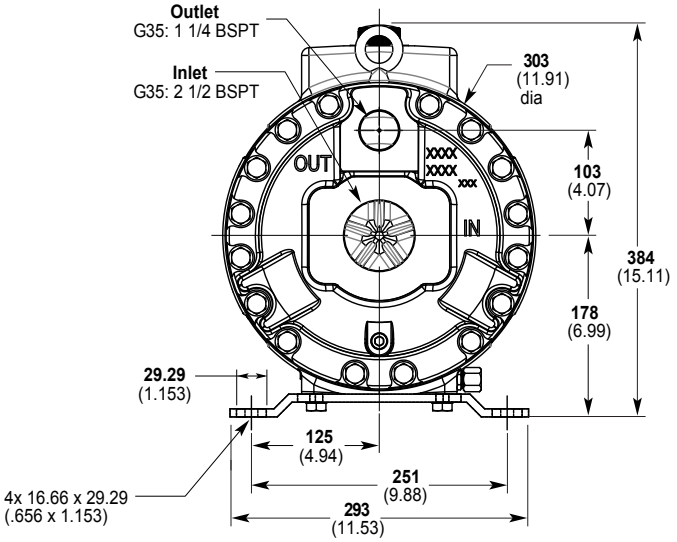

G35 Models with SAE Flange Inlet/Outlet Ports mm (Inches)

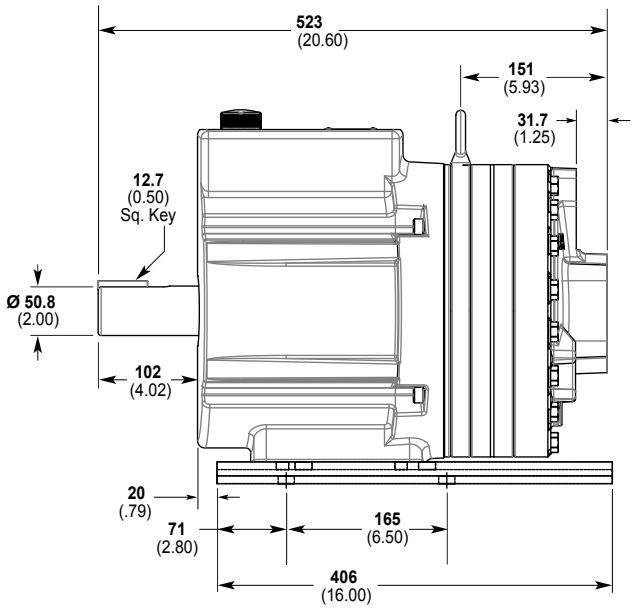

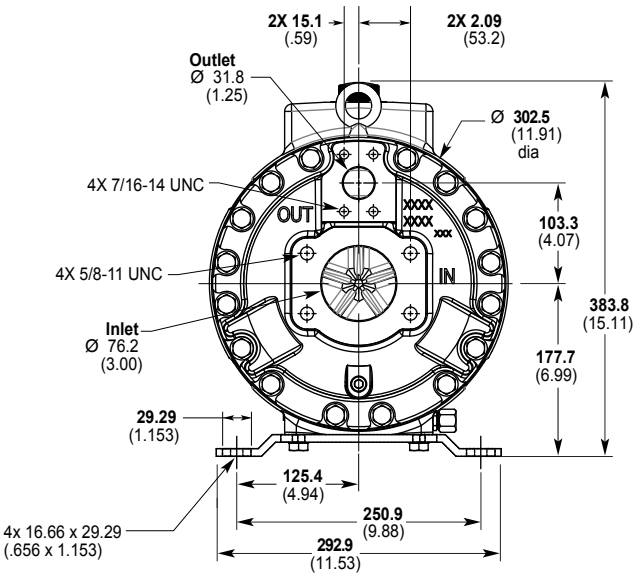

Note: *Dimensions are for reference only. Contact Wanner International for certified drawings.*

G35 Series Representative Drawings

G35 Non-metallic Pump Head with SAE Flange Inlet/ Outlet Ports mm (Inches)

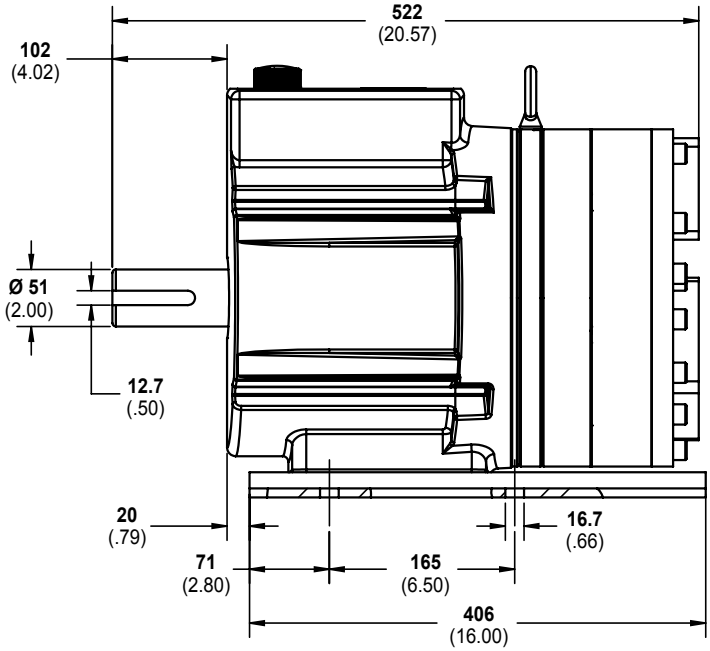

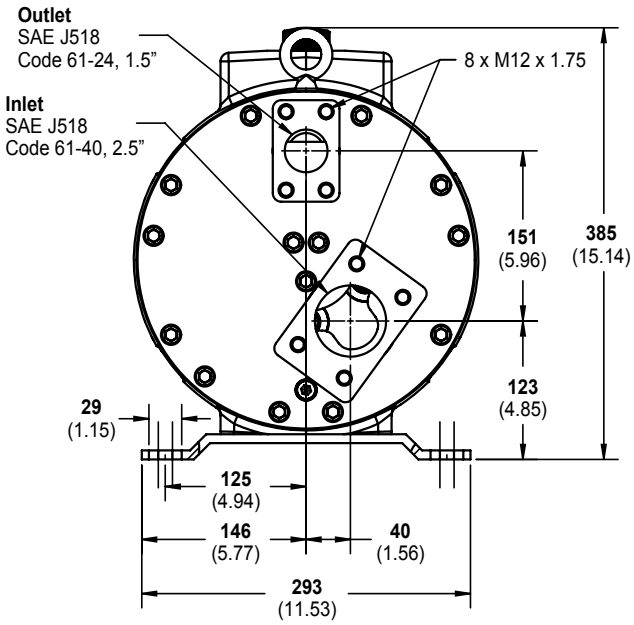

G35 Models with ANSI RF Flange Inlet/Outlet Ports mm (Inches)

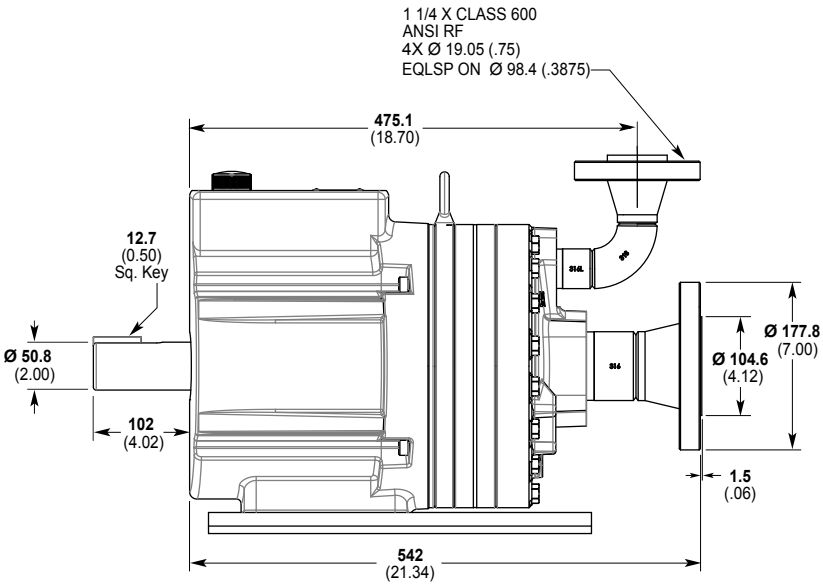

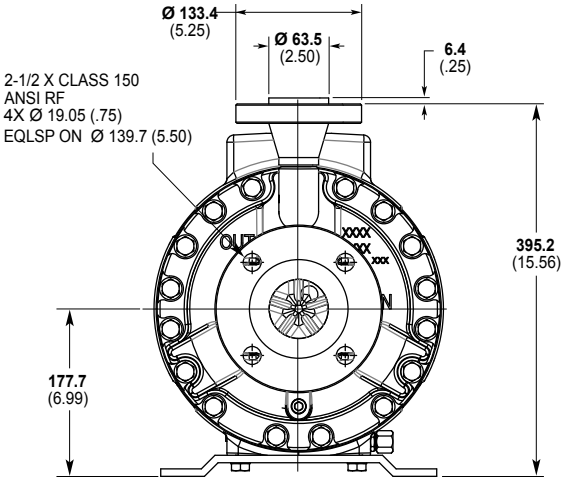

Note: *Dimensions are for reference only. Contact Wanner International for certified drawings.*

G35 Series Representative Drawings / Valves

G35 Models with Tri-clamp Flanges mm (Inches)

Maximum Discharge Pressure: 80 bar

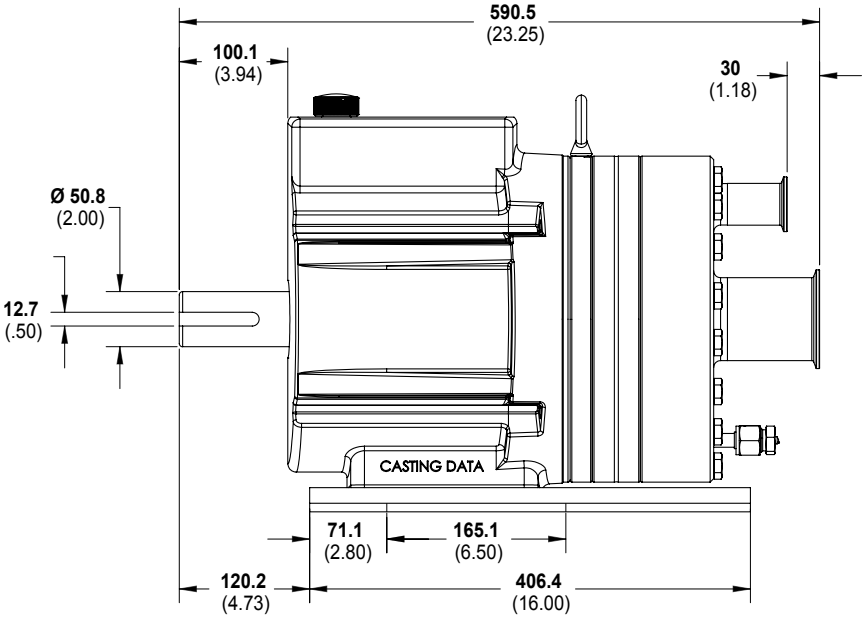

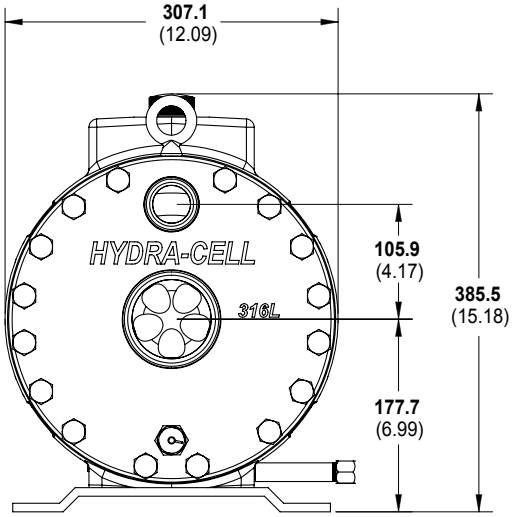

Note: *Dimensions are for reference only. Contact Wanner International for certified drawings.*

Valve Selection

A seal-less C64 Pressure Regulating Valve is recommended for Hydra-Cell G35 pumping systems, especially for high-pressure requirements or when handling dirty fluids.

A C24 Pressure Regulating Valve provides a capable, lower-cost alternative to C64 valves for Hydra-Cell G35 pumping systems.

G35 Series How to Order

Ordering Information

1	2	3	4	5	6	7	8	9	10	11	12
	3	5									

A complete G35 Series Model Number contains 12 digits including 10 customer-specified design and materials options, for example: G35XKBTHFECA.

Digit	Order Code	Description
1-3		**Pump Configuration**
	G35	Shaft-driven (BSPT Ports)
	D35	Shaft-driven (NPT Ports or ANSI Flanges or SAE Flanged Ports)
4		**Hydraulic End Cam**
	X	Max 138 l/min (36.5 gpm) @ 1050 rpm
	E	Max 129 l/min (34.0 gpm) @ 1150 rpm
5		**Pump Head Version**
	K	Kel-Cell BSPT Ports or ANSI Flanges
	E	Kel-Cell SAE Ports (only supplied with D35 pumps)
		See lower right for ATEX Certification Kit Options.
6		**Pump Head Material**
	B	**Brass**
	C	**Ductile Iron** (Nickel-plated)
	G	**Duplex Alloy 2205 Stainless Steel** (with Hastelloy C followers & follower screws)
	Q	**316L Stainless Steel** with ANSI RF Flanges, Class 600lb x 1500lb
	R	**316L Stainless Steel** with ANSI RF Flanges, Class 150lb x 600lb
	S	**316L Stainless Steel** (Threaded or SAE Ports)
	-	**316L Stainless Steel** with Tri-clamp (3" Inlet & 1.5" Discharge) Flanges polished to 0.8 Ra♦
	-	**316L Stainless Steel** with Tri-clamp (3" Inlet & 1.5" Discharge) Flanges polished to 0.4 Ra♦
		Tri-clamp options include polishing of Pump Head, Valve Plate, Valves, Valve Seats, Springs & Retainers to 0.8 Ra or 0.4 Ra per above, Sanitary Drain along with TSE, Passivation, Surface Finish & Weld Procedure Certificates
	N	**Polypropylene** (with Hastelloy C screws & follower screws) SAE Flanges only
	P	**Polypropylene** (with 316L Stainless Steel screws & follower screws) SAE Flanges only
	T	**Hastelloy CW12MW**
		♦Selecting this option will result in a Wanner International generated Pump Code, stamped onto the pump.
7		**Diaphragm & O-ring Material**
	A	Aflas diaphragm / PTFE o-ring
	E	EPDM (requires EPDM-compatible oil - Digit 12 oil code D)
	G	FKM
	J	PTFE (available with E cam only; 960 rpm max)
	K	FFKM diaphragm / PTFE o-ring
	P	Neoprene
	T	Buna-N

Digit	Order Code	Description
8		**Valve Seat Material**
	C	Ceramic
	D	Tungsten Carbide (900 rpm max.)
	H	17-4 Stainless Steel
	N	Nitronic 50
	T	Hastelloy C
9		**Valve Material**
	C	Ceramic
	D	Tungsten Carbide (900 rpm max.)
	F	17-4 Stainless Steel
	N	Nitronic 50
	T	Hastelloy C
10		**Valve Springs**
	E	Elgiloy
	H	17-7 Stainless Steel
	T	Hastelloy C
11		**Valve Spring Retainers**
	C	Celcon
	H	17-7 Stainless Steel (used with metallic heads only)
	M	PVDF
	P	Polypropylene
	T	Hastelloy C (used with metallic heads only)
	Y	Nylon (Zytel)
12		**Hydra-Oil**
	A	10W30 standard-duty oil
	B	40-wt for continuous-duty oil (use with 316L SST or Hastelloy CW12MW pump head - standard)
	D	EPDM-compatible oil
	E	Food-contact oil
	G	5W30 cold-temp severe-duty synthetic oil
	H	15W50 high-temp severe-duty synthetic oil

G35 Pump Housing is standard as Cast Aluminum. Upgrade to Ductile Iron available.

ATEX Certification Kit Options

As a separate line on your order, please add the required ATEX Certification Kit Option.

ATEX 2014/34/EU Certified, Category 2, Zone 1

ATEX 2014/34/EU Certified, Category 3, Zone 2

Notes:

All options include Certificate, Oil Level Monitor or Sight Glass, Earth Stud & Secondary ATEX Label.

Extra oil is required to fill the oil bowl during installation of ATEX pumps. This oil is not included and must be ordered separately.

G35 Series

Wanner International Ltd.™

WANNER INTERNATIONAL
UNITED KINGDOM
8 & 9 Fleet Business Park
Sandy Lane • Church Crookham
Hampshire UK GU52 8BF
t +44(0) 1252 816847
e: sales@wannerint.com

OFFICIAL UK DISTRIBUTOR:
Michael Smith Engineers Limited
www.michael-smith-engineers.co.uk
0800 316 7891

Wanner Engineering, Inc.™

WANNER ENGINEERING
WORLD HEADQUARTERS &
MANUFACTURING
Minneapolis USA
t+1 612-332-5681
e: sales@wannereng.com

REGIONAL OFFICE
Texas USA
t+1 940-322-7111
e: sales@wannereng.com

LATIN AMERICAN OFFICE
São Paulo, Brazil
t +55 (11) 99582-1969
e: sales@wannereng.com

Wanner Pumps Ltd.™

WANNER PUMPS
Kowloon HONG KONG
t +852 3428 6634
e: sales@wannerpumps.com

Shanghai CHINA
t +86-21-6876 3700
e: sales@wannerpumps.com

www.hydra-cell.co.uk

G35 Version-9 01/22