Q155 Series Low Pressure

Maximum Flow Rate: 595 l/min (157 gpm) 5383 BPD
Maximum Pressure: 145 bar (2100 psi)

ATEX

API 674

WANNER Hydra-Cell® Seal-less Pump Technology

Q155 Series low pressure model with Stainless Steel pump head.

Available to Meet API 674

- Seal-less design eliminates leaks, hazards and the expense associated with seals and packing.
- Low NPSH requirements allow for operation with a vacuum condition on the suction. Positive suction pressure is not necessary, and there is no need for a booster or charge pump.
- Patented Diaphragm Positioning Control (DPC) protects the diaphragms against a closed or blocked suction line.
- Can run dry indefinitely without damage, eliminating downtime and repair costs. *(Note: Intentional dry running not permitted in ATEX zones.)*
- Unique diaphragm design handles more abrasives with less wear than gear, screw or plunger pumps.
- Hydraulically balanced diaphragms to handle high pressures with low stress.
- Significantly lower energy costs than centrifugal pumps.
- Rugged construction for long life with minimal maintenance.
- Compact design and double-ended shaft provide a variety of installation options.

Q155 LP Version-9 11/21

Wanner International Ltd.™

Q155 Low Pressure Performance

Capacities

Model	Max. Input rpm	Plunger Dia. Inches	Plunger Dia. mm	Max. Flow Capacities gpm	Max. Flow Capacities l/min	Max. Flow Capacities BPD	Max. Pressure Ratings Discharge psi	Max. Pressure Ratings Discharge bar	Max. Pressure Ratings Inlet psi	Max. Pressure Ratings Inlet bar
Q155E	450	2.500	64	157	595	5383	1500	103	500	34
Q155F	450	2.250	57	127	490	4354	1850	128	500	34
Q155H	450	2.125	54	111	421	3806	2100	145	500	34

Consult factory when operating below 45 rpm.

Maximum Flow at Designated Pressure

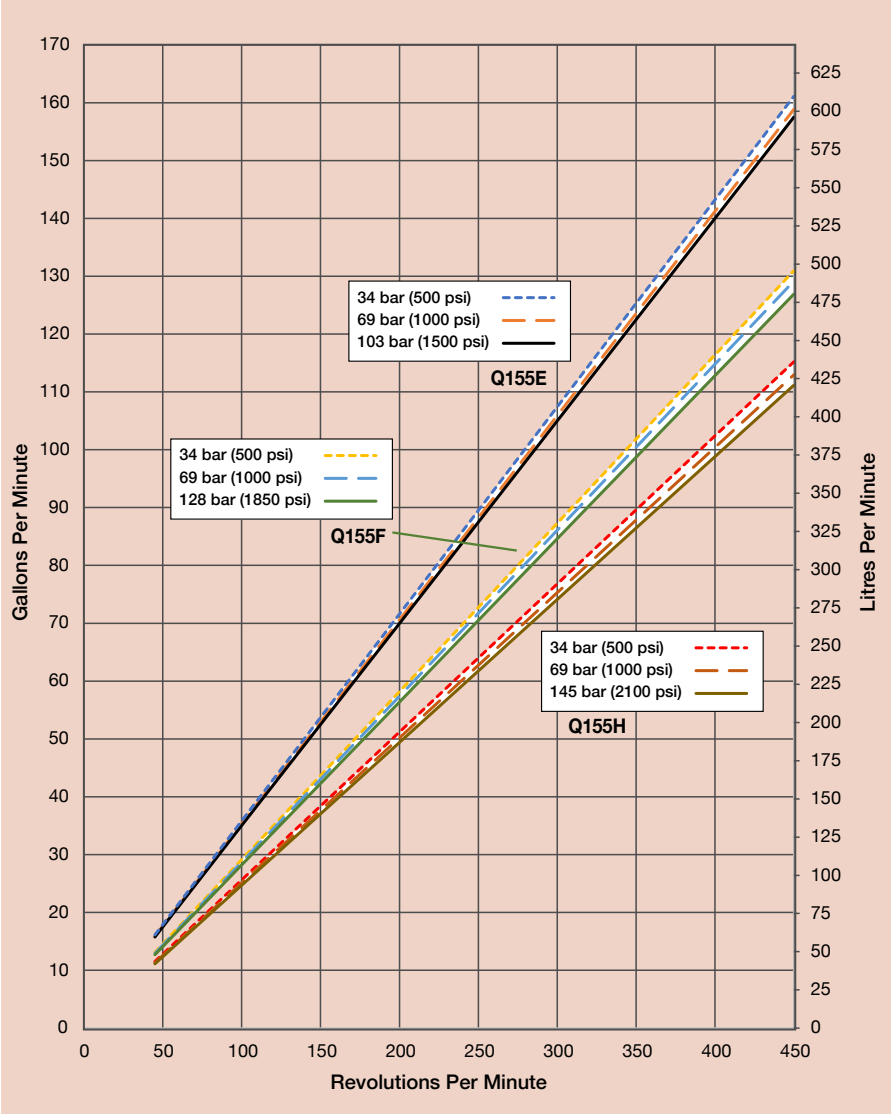

Note: Each pump complies with item 6.8.2 of API 674 across the full performance range.

Q155 Low Pressure Specifications

Flow Capacities

Model	Pressure bar (psi)	rpm	gpm	l/min	BPD
Q155E	103 (1500)	450	157	595	5383
Q155F	128 (1850)	450	127	490	4354
Q155H	145 (2100)	450	111	421	3806

Delivery

	Pressure bar (psi)	gal/rev	litres/rev
Q155E	34 (500)	0.358	1.354
	69 (1000)	0.353	1.338
	103 (1500)	0.350	1.323
Q155F	34 (500)	0.291	1.102
	69 (1000)	0.287	1.085
	128 (1850)	0.282	1.068
Q155H	34 (500)	0.256	0.967
	69 (1000)	0.251	0.951
	145 (2100)	0.247	0.936

rpm

Maximum: 450
Minimum: 45 (Consult factory for speeds less than 45 rpm.)

Maximum Discharge Pressure

Metallic Heads: Q155E 103 bar (1500 psi)
Q155F 128 bar (1850 psi)
Q155H 145 bar (2100 psi)

Maximum Inlet Pressure 34 bar (500 psi)

Operating Temperature Limits

Maximum Liquid Temperature: 82.2°C (180°F)
Diaphragm Material Minimum Service Temperature (Ambient & Liquid):
Aflas 30°C
EPDM -20°C
FKM 5°C
Buna-N (HBNR) -5°C
Consult factory for temperatures outside of these ranges.

Maximum Solids Size 800 microns

Input Shaft Left or Right Side

Inlet Ports Weld-On: 4″ / SCH. 40
4″ NPT, 4″ Class 300 RF ANSI Flange

Discharge Ports Weld-On: 3″ / SCH. 80
3″ NPT, 3″ Class 900 RF ANSI Flange

Plunger Stroke Length 88.9 mm (3-1/2 inch)

Shaft Diameter 76.2 mm (3 inch)

Shaft Rotation Uni-directional (See rotation arrow.)

Oil Capacity 33.1 litres (35 US quarts)
See page 5 for oil selection and specification.

Weight

Metallic Heads: 771 kg (1700 lbs.)

Fluid End Materials

Diaphragm Follower Screw: 316 Stainless Steel
Outlet Valve Retainer: 316 Stainless Steel
Plug-Outlet Valve Port: 316 Stainless Steel
Inlet Valve Retainer: 316 Stainless Steel
See page 5 for customer-specified fluid end materials choices.

Power End Materials

Crankshaft: Forged Q&T Alloy Steel
Connecting Rods: Ductile Iron
Crossheads: 12L14 Steel
Crankcase: Ductile Iron
Bearings: Spherical Roller/Journal (outer mains)
Steel Backed Babbitt (crankpin)
Bronze (wrist pin, center mains)

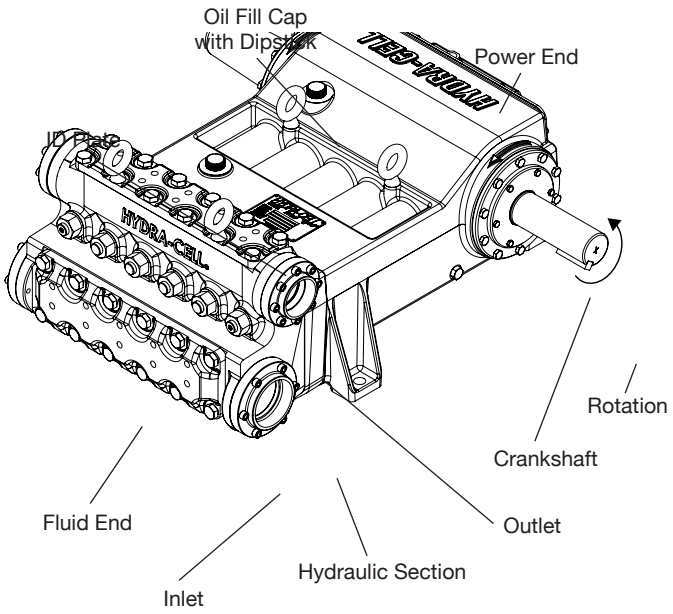

Net Positive Suction Head (NPSHr)

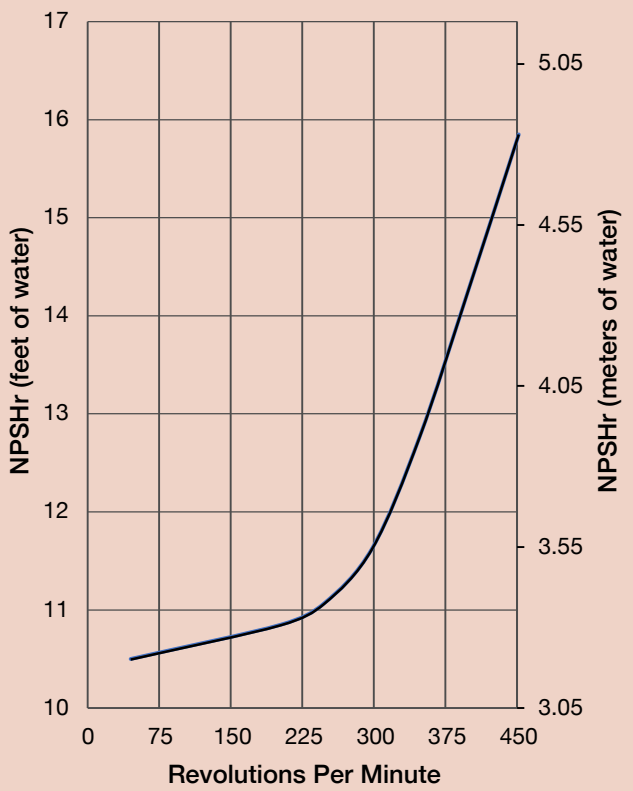

Calculating Required Horsepower (kW)*

$$\frac{\text{gpm} \times \text{psi}}{1{,}460} = \text{electric motor hp*}$$

$$\frac{\text{lpm} \times \text{bar}}{511} = \text{electric motor kW*}$$

** hp (kW) is required application power.*

Attention!

When sizing motors with variable speed drives (VFD): It is very important to select a motor and a VFD rated for constant torque inverter duty service and that the motor is rated to meet the torque requirements of the pump throughout desired speed range.

Due to Wanner Engineering continuous improvement practices, performance data and specifications may change without notice.

Q155 Low Pressure Dimensions

Threaded Version Inches (mm)

Front View

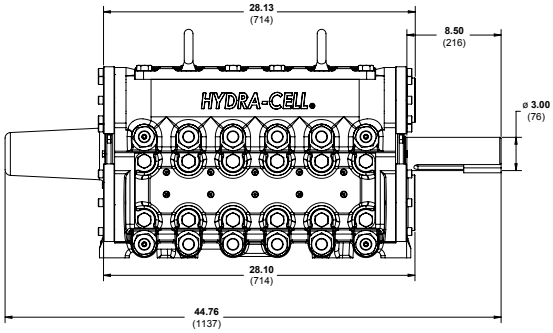

Side View

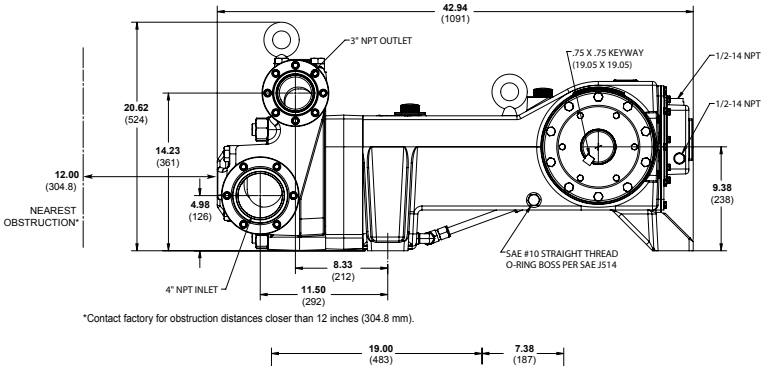

Bottom View

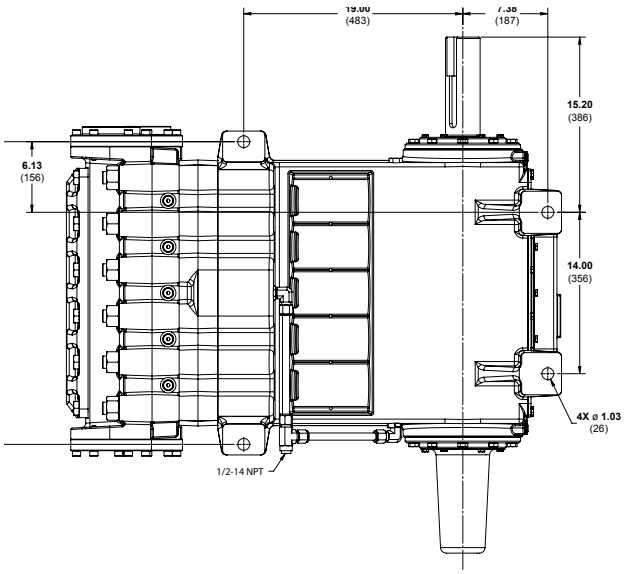

Note: *Dimensions are for reference only. Contact Wanner International for certified drawings*

Q155 Series Low Pressure How to Order

Ordering Information

1	2	3	4	5	6	7	8	9	10	11	12	13	14
Q	1	5	5										

A complete Q155 Series Low Pressure Model contains 14 digits including 10 customer-specified design and materials options, for example: Q155ERSGDDESAC.

Low Pressure

Digit	Order Code	Description
1-4		**Pump Configuration**
	Q155	Shaft-driven
		API 674 - Contact Wanner International
5		**Performance**
	E	Max. 595 l/min (157 gpm) 5383 BPD @ 103 bar (1500 psi)
	F	Max. 490 l/min (127 gpm) 4354 BPD @ 128 bar (1850 psi)
	H	Max. 421 l/min (111 gpm) 3806 BPD @ 145 bar (2100 psi)
6		**Pump Head Version**
	A	NPT Threaded Ports (Steel)
	C	Weld Neck (Steel)
	D	Weld Neck (316L Stainless Steel)
	E	Weld Neck (Hastelloy)
	F	Weld Neck (Duplex Alloy 2205 Stainless Steel)
	G	ANSI Flanged Ports (Duplex Alloy 2205 Stainless Steel)
	R	ANSI Flanged Ports (Steel)
	S	ANSI Flanged Ports (316L Stainless Steel)
	T	ANSI Flanged Ports (Hastelloy)
7		**Pump Head Material**
	D	Nickel Aluminium Bronze (NAB)
	G	Duplex Alloy 2205 Stainless Steel
	S	316 Stainless Steel CF3M
	T	Hastelloy CX2M
8		**Diaphragm & O-ring Material**
	A	Aflas
	E	EPDM (requires EPDM-compatible oil - digit 13 code D)
	G	FKM
	T	Buna-N (HBNR)
9		**Valve Seat Material**
	D	Tungsten Carbide*
	H	17-4 Stainless Steel
	N	Nitronic 50
	T	Hastelloy C
10		**Valve Material**
	D	Tungsten Carbide*
	F	17-4 Stainless Steel
	N	Nitronic 50
	T	Hastelloy C

*Tungsten Carbide valve seat and disc are a matched set and must be purchased together.

Digit	Order Code	Description
11		**Valve Springs**
	E	Elgiloy
	T	Hastelloy C
12		**Valve Spring Retainers**
	S	316 SST
	T	Hastelloy C
13		**Hydra-Oil**
	A	10W30 standard-duty oil
	B	40-wt. oil
	D	EPDM-compatible oil
	E	Food-contact oil
	H	15W50 high-temp severe-duty synthetic oil
14		**Oil Level Monitor Cover**
	C	Float switch, normally closed (recommended)
	O	Float switch, normally open
	W	Level transmitter, ATEX, analog output**
	X	Float switch, ATEX, normally closed***

**ATEX instrument only, pump as standard.
***ATEX-compliant pump and float switch.

Note: The Oil Level Monitor Cover is an assembly that replaces the previous back cover on Q155 Series pumps. It contains a float switch assembly that can trigger an alarm or shutdown when pre-defined levels of high or low oil are reached. It may also be ordered without a float switch cover.

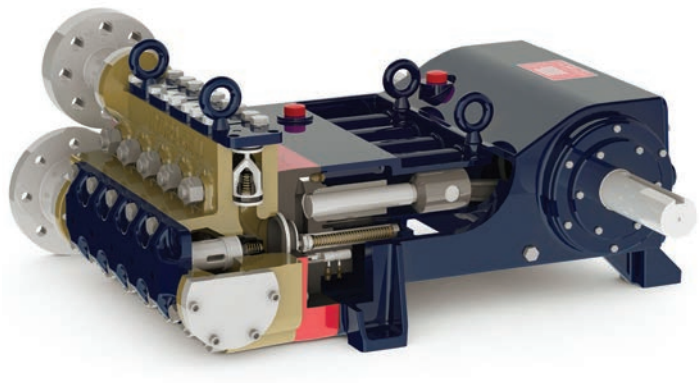

Q155 Series Low Pressure

Standards Compliance

ATEX

Wanner International Ltd.™

WANNER INTERNATIONAL
UNITED KINGDOM
8 & 9 Fleet Business Park
Sandy Lane • Church Crookham
Hampshire UK GU52 8BF
t +44(0) 1252 816847
e: sales@wannerint.com

Wanner Engineering, Inc.™

WANNER ENGINEERING
WORLD HEADQUARTERS &
MANUFACTURING
Minneapolis USA
t+1 612-332-5681
e: sales@wannereng.com

REGIONAL OFFICE
Texas USA
t+1 940-322-7111
e: sales@wannereng.com

LATIN AMERICAN OFFICE
São Paulo, Brazil
t +55 (11) 99582-1969
e: sales@wannereng.com

Wanner Pumps Ltd.™

WANNER PUMPS
Kowloon HONG KONG
t +852 3428 6634
e: sales@wannerpumps.com

Shanghai CHINA
t +86-21-6876 3700
e: sales@wannerpumps.com

OFFICIAL UK DISTRIBUTOR:
Michael Smith Engineers Limited
www.michael-smith-engineers.co.uk
freephone: 0800 316 7891

Q155 LP Version-9 11/21

www.hydra-cell.co.uk