Q155 Series Medium Pressure

Maximum Flow Rate: 295 l/min (78 gpm) 2674 BPD
Maximum Pressure: 241 bar (3500 psi)

ATEX

API 674

CE

WANNER Hydra-Cell® Seal-less Pump Technology

Q155 Series medium pressure model with Stainless Steel pump head.

Available to Meet API 674

- Seal-less design eliminates leaks, hazards and the expense associated with seals and packing.
- Low NPSH requirements allow for operation with a vacuum condition on the suction. Positive suction pressure is not necessary, and there is no need for a booster or charge pump.
- Patented Diaphragm Positioning Control (DPC) protects the diaphragms against a closed or blocked suction line.
- Can run dry indefinitely without damage, eliminating downtime and repair costs. *(Note: Intentional dry running not permitted in ATEX zones.)*
- Unique diaphragm design handles more abrasives with less wear than gear, screw or plunger pumps.
- Hydraulically balanced diaphragms to handle high pressures with low stress.
- Significantly lower energy costs than centrifugal pumps.
- Rugged construction for long life with minimal maintenance.
- Compact design and double-ended shaft provide a variety of installation options.

Q155 MP Version-8 06/20

Wanner International Ltd.

Q155 Medium Pressure Performance

Capacities

Model	Max. Input rpm	Plunger Dia. Inches	Plunger Dia. mm	Max. Flow Capacities gpm	Max. Flow Capacities l/min	Max. Flow Capacities BPD	Max. Pressure Ratings Discharge psi	Max. Pressure Ratings Discharge bar	Max. Pressure Ratings Inlet psi	Max. Pressure Ratings Inlet bar
Q155K	450	1.750	44	78	295	2674	3000	207	500	34
Q155M	450	1.625	41	63	238	2160	3500	241	500	34

Consult factory when operating below 45 rpm.

Maximum Flow at Designated Pressure

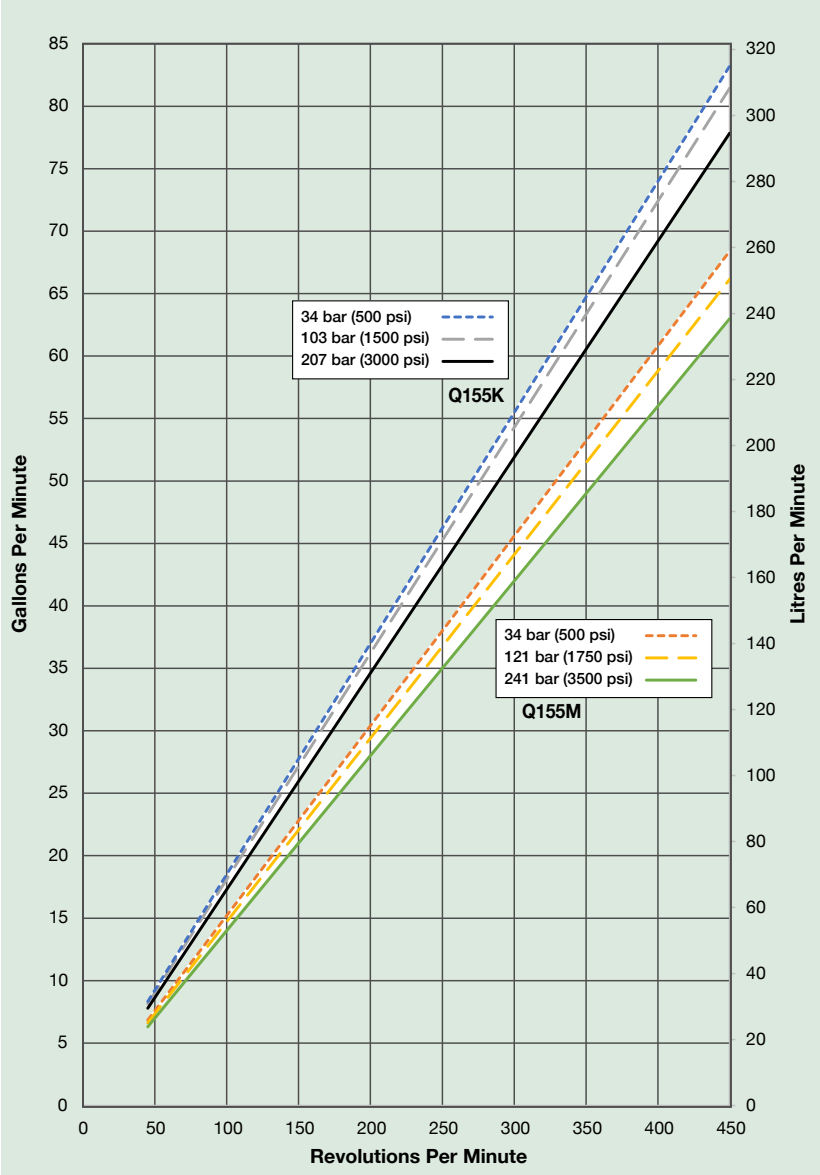

Note: Each pump complies with item 6.8.2 of API 674 across the full performance range.

Q155 Medium Pressure Specifications

Flow Capacities

Model	Pressure bar (psi)	rpm	gpm	l/min	BPD
Q155K	207 (3000)	450	78	295	2674
Q155M	241 (3500)	450	63	238	2160

Delivery

	Pressure bar (psi)	gal/rev	litres/rev
Q155K	34 (500)	0.185	0.700
	103 (1500)	0.181	0.685
	207 (3000)	0.173	0.654
Q155M	34 (500)	0.152	0.575
	121 (1750)	0.147	0.556
	241 (3500)	0.140	0.530

rpm

Maximum: 450
Minimum: 45 (Consult factory for speeds less than 45 rpm.)

Maximum Discharge Pressure

Metallic Heads: Q155K 207 bar (3000 psi)
Q155M 241 bar (3500 psi)

Maximum Inlet Pressure 34 bar (500 psi)

Operating Temperature Limits

Maximum Liquid Temperature: 82.2°C (180°F)
Diaphragm Material Minimum Service Temperature (Ambient & Liquid):
Aflas 30°C
EPDM -20°C
FKM 5°C
Buna-N (HBNR) -5°C
Consult factory for temperatures outside of these ranges.

Maximum Solids Size 800 microns

Input Shaft Left or Right Side

Inlet Ports Weld-On: 4" / SCH. 40
4" NPT, 4" Class 300 RF ANSI Flange

Discharge Ports Weld-On 2" / SCH. 160
2" NPT, 2" Class 2500 RTJ ANSI Flange

Plunger Stroke Length 88.9 mm (3-1/2 inch)

Shaft Diameter 76.2 mm (3 inch)

Shaft Rotation Uni-directional (See rotation arrow.)

Oil Capacity 33.1 litres (35 US quarts)
See page 5 for oil selection and specification.

Weight

Metallic Heads: 771 kg (1700 lbs.)

Fluid End Materials

Diaphragm Follower Screw: 316 Stainless Steel
Outlet Valve Retainer: 316 Stainless Steel
Plug-Outlet Valve Port: 316 Stainless Steel
Inlet Valve Retainer: 316 Stainless Steel
See page 5 for customer-specified fluid end materials choices.

Power End Materials

Crankshaft: Forged Q&T Alloy Steel
Connecting Rods: Ductile Iron
Crossheads: 12L14 Steel
Crankcase: Ductile Iron
Bearings: Spherical Roller/Journal (outer mains)
Steel Backed Babbitt (crankpin)
Bronze (wrist pin, center mains)

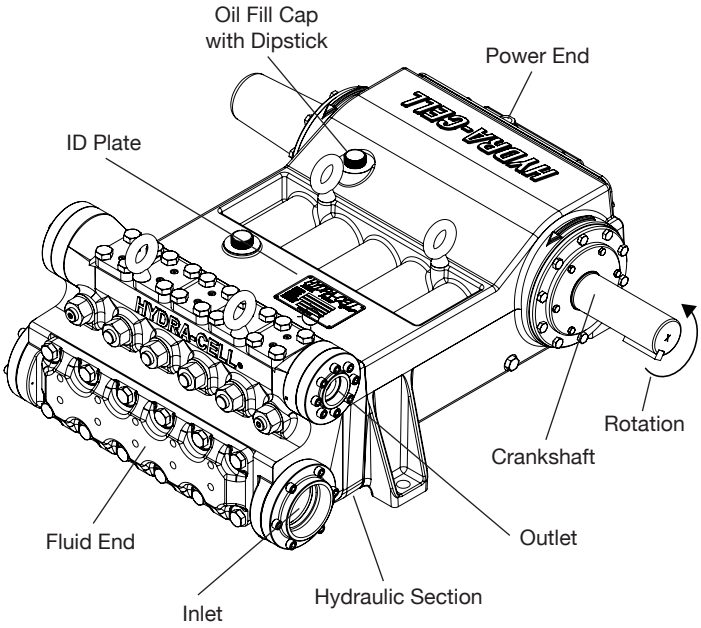

Net Positive Suction Head (NPSHr)

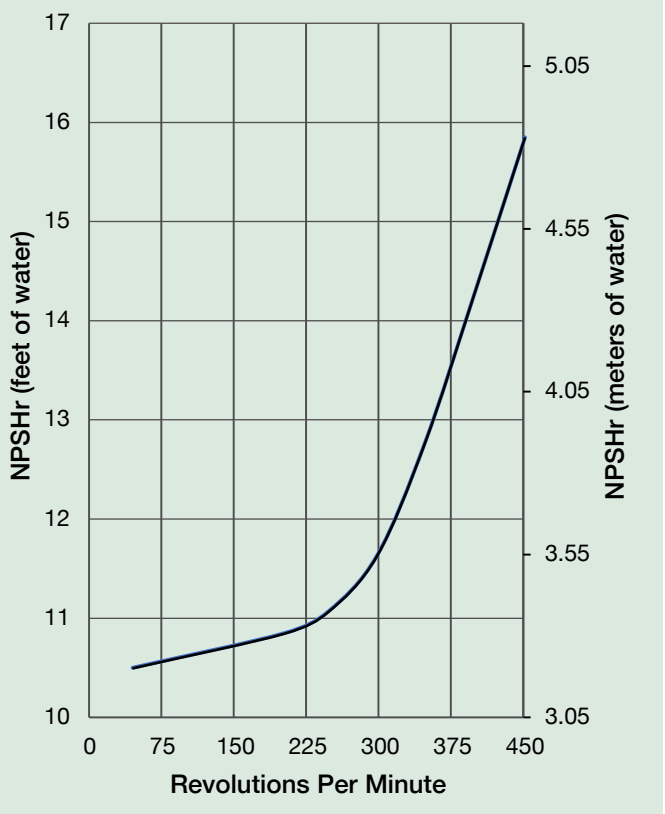

Calculating Required Horsepower (kW)*

$$\frac{\text{gpm x psi}}{1{,}460} = \text{electric motor hp*}$$

$$\frac{\text{lpm x bar}}{511} = \text{electric motor kW*}$$

** hp (kW) is required application power.*

Attention!

When sizing motors with variable speed drives (VFD): It is very important to select a motor and a VFD rated for constant torque inverter duty service and that the motor is rated to meet the torque requirements of the pump throughout desired speed range.

Due to Wanner Engineering continuous improvement practices, performance data and specifications may change without notice.

Q155 Medium Pressure Dimensions

Threaded Version Inches (mm)

Front View

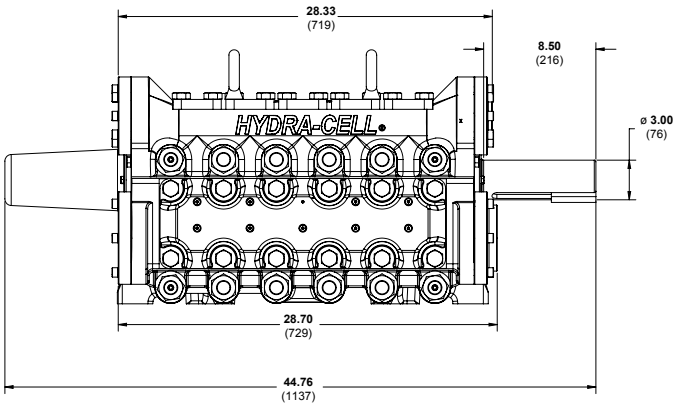

Side View

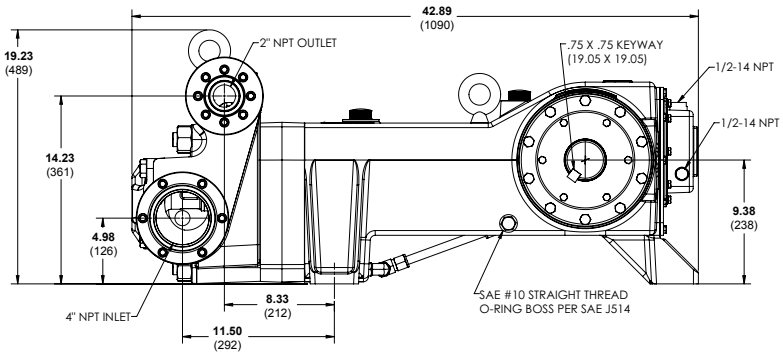

Bottom View

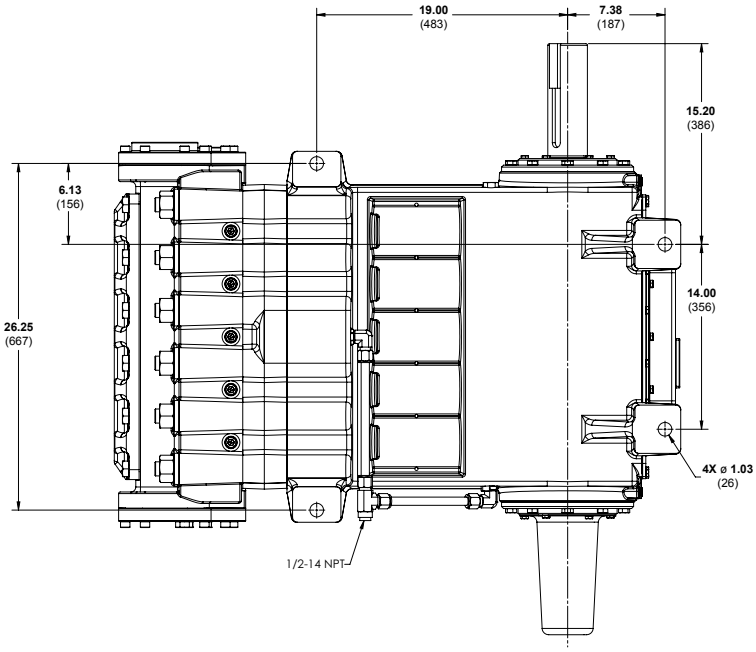

Note: *Dimensions are for reference only. Contact Wanner International for certified drawings*

Q155 Series Medium Pressure How to Order

Ordering Information

1	2	3	4	5	6	7	8	9	10	11	12	13	14
Q	1	5	5										

A complete Q155 Series Medium Pressure Model contains 14 digits including 10 customer-specified design and materials options, for example: Q155MADTTTETAC.

Medium Pressure

Digit	Order Code	Description
1-4		**Pump Configuration**
	Q155	Shaft-driven
		API 674 - Contact Wanner International
5		**Performance**
	K	Max. 295 l/min (78 gpm) 2674 BPD @ 207 bar (3000 psi)
	M	Max. 238 l/min (63 gpm) 2160 BPD @ 241 bar (3500 psi)
6		**Pump Head Version**
	A	NPT Threaded Ports (Steel)
	C	Weld Neck (Steel)
	D	Weld Neck (316L Stainless Steel)
	E	Weld Neck (Hastelloy)
	F	Weld Neck (Duplex Alloy 2205 Stainless Steel)
	G	ANSI Flange Ports (Duplex Alloy 2205 Stainless Steel)
	R	ANSI Flange Ports (Steel)
	S	ANSI Flange Ports (316L Stainless Steel)
	T	ANSI Flange Ports (Hastelloy)
7		**Pump Head Material**
	D	Nickel Aluminium Bronze (NAB)
	G	Duplex Alloy 2205 Stainless Steel
	S	316L Stainless Steel C3FM
	T	Hastelloy CX2M
8		**Diaphragm & O-ring Material**
	A	Aflas
	E	EPDM (requires EPDM-compatible oil - digit 13 code D)
	G	FKM
	T	Buna-N (HBNR)
9		**Valve Seat Material**
	D	Tungsten Carbide*
	H	17-4 Stainless Steel
	N	Nitronic 50
	T	Hastelloy C
10		**Valve Material**
	D	Tungsten Carbide*
	F	17-4 Stainless Steel
	N	Nitronic 50
	T	Hastelloy C

*Tungsten Carbide valve seat and disc are a matched set and must be purchased together.

Digit	Order Code	Description
11		**Valve Springs**
	E	Elgiloy
	T	Hastelloy C
12		**Valve Spring Retainers**
	M	PVDF
	P	Polypropylene
	S	316 SST
	T	Hastelloy C
13		**Hydra-Oil**
	A	10W30 standard-duty oil
	B	40-wt. oil
	D	EPDM-compatible oil
	E	Food-contact oil
	H	15W50 high-temp severe-duty synthetic oil
14		**Oil Level Monitor Cover**
	C	Float switch, normally closed (recommended)
	O	Float switch, normally open
	X	ATEX Certified Pump 2014/34/EU Zone 1
		II 2/3 G Ex h IIC T5...T4 Gb/Gc
		With ATEX float switch

Note: The Oil Level Monitor Cover is an assembly that replaces the previous back cover on Q155 Series pumps. It contains a float switch assembly that can trigger an alarm or shutdown when pre-defined levels of high or low oil are reached. It may also be ordered without a float switch cover.

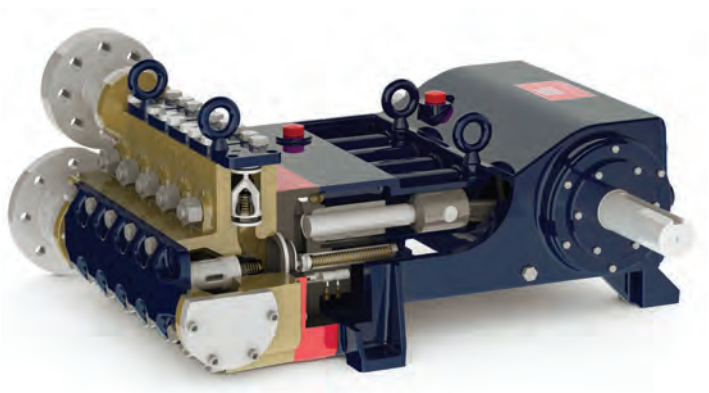

Q155 MP Version-8 06/20

Q155 Series Medium Pressure

Standards Compliance

ATEX

Wanner International Ltd.

WANNER INTERNATIONAL
UNITED KINGDOM
8 & 9 Fleet Business Park
Sandy Lane • Church Crookham
Hampshire UK GU52 8BF
t +44(0) 252 816847
e: sales@wannerint.com

Wanner Engineering, Inc.

WANNER ENGINEERING
WORLD HEADQUARTERS &
MANUFACTURING
Minneapolis USA
t+1 612-332-5681
e: sales@wannereng.com

REGIONAL OFFICE
Texas USA
t+1 940-322-7111
e: sales@wannereng.com

LATIN AMERICAN OFFICE
São Paulo, Brazil
t + 55 (11) 99582-1969
e: sales@wannereng.com

Wanner Pumps Ltd.

WANNER PUMPS
Kowloon HONG KONG
t +852 3428 6634
e: sales@wannerpumps.com

Shanghai CHINA
t +86-21-6876 3700
e: sales@wannerpumps.com

Q155 MP Version-8 06/20

www.hydra-cell.co.uk

OFFICIAL UK DISTRIBUTOR: Michael Smith Engineers Ltd website: www.michael-smith-engineers.co.uk freephone: 0800 316 7891