Hydra·Cell®
METERING SOLUTIONS™

API 675

P100 Series Electronic Precision Metering Pumps

Maximum Flow Rate: 85 L/hr
Maximum Pressure: 103 bar for Metallic Pump Heads
24 bar for Non-metallic Pump Heads

Meeting & Exceeding API 675 Performance Standards

- Steady State Accuracy: ±1%
- Linearity: ±3% (over a 10 to 1 turn-down as per API 675)
- Repeatability: ±3%
- Infinite turn-down achievable

Hydra·Cell METERING SOLUTIONS™

Performance - Flow Capacities and Pressure Ratings

For Synchronous Speed, Self-cooled Motors

L/hr Maximum Flow at Designated Pressure

L/hr All Pumps		L/hr Metallic Pump Heads Only			Pump RPM	Gear Ratio	Motor RPM
7 Bar	17 Bar	34 Bar	69 Bar	100 Bar			
3.4	3.4	3.3	3.2	N/A	25	60:1	1500
4.1	4.1	4.0	3.9	N/A	30	50:1	
5.1	5.1	5.1	4.8	4.7	37.5	40:1	
6.9	6.9	6.8	6.5	6.3	50	30:1	
8.3	8.3	8.1	7.8	7.6	60	25:1	
10.5	10.4	10.2	9.8	9.5	75	20:1	
14.0	13.9	13.6	13.1	12.7	100	15:1	
21.1	20.9	20.4	19.6	19.1	150	10:1	
28.2	27.9	27.3	26.2	25.5	200	7.5:1	
42.4	41.9	41.0	39.4	38.3	300	5:1	
56.6	55.9	54.6	52.5	51.1	400	7.5:1	3000
85.0	83.8	82.0	78.8	76.7	600	5:1	

Required Motor kW

0.18	0.25	0.37	0.55	0.75

Notes:

1. The motor kW are based on ambient temperature conditions up to 40˚C. For ambient temperatures above 40˚C, please contact Wanner International.
2. Contact factory for performance specifications.
3. Based on using IE2 motors.
4. Maximum continuous motor speed is 1800 rpm at full pressure.
5. For intermittent or reduced pressure duties, please contact Wanner International.

For 10:1 Turndown, Self-cooled Motors

L/hr Maximum Flow at Designated Pressure

L/hr All Pumps		L/hr Metallic Pump Heads Only			Pump RPM	Gear Ratio	Motor RPM
7 Bar	17 Bar	34 Bar	69 Bar	100 Bar			
3.4	3.4	3.3	3.2	N/A	25	60:1	1500
4.1	4.1	4.0	3.8	N/A	30	50:1	
5.1	5.1	5.1	4.8	4.7	37.5	40:1	
6.9	6.9	6.8	6.5	6.2	50	30:1	
8.3	8.3	8.1	7.8	7.6	60	25:1	
10.5	10.4	10.2	9.8	9.5	75	20:1	
14.0	13.9	13.6	13.1	12.7	100	15:1	
21.1	20.9	20.4	19.6	19.1	150	10:1	
28.2	27.9	27.3	26.2	25.5	200	7.5:1	
42.4	41.9	41.0	39.4	38.3	300	5:1	
56.6	55.9	54.6	52.5	51.1	400	7.5:1	3000
85.0	83.8	82.0	78.8	76.7	600	5:1	

Required Motor kW

0.18	0.25	0.37	0.55	0.75	1.1

Notes:

1. The motor kW are based on ambient temperature conditions up to 25˚C. For ambient temperatures above 25˚C, Force-cooled Motors may be required. Please contact Wanner International.
2. Contact factory for performance specifications.
3. Based on using IE2 motors.
4. Maximum continuous motor speed is 1800 rpm at full pressure.
5. For intermittent or reduced pressure duties, please contact Wanner International.

P100 Series

Hydra·Cell METERING SOLUTIONS™

Specifications

Diaphragms per Liquid End	1
Flow Control	Electronic variable speed drive
Maximum Discharge Pressure	
Metallic Heads:	103 bar
Non-metallic Heads:	PVDF to 24 bar
	Polypropylene to 17 bar
Maximum Inlet Pressure	17 bar
Maximum Liquid Operating Temperature	
Metallic Heads:	121 °C - Consult factory for correct component selection for temperatures greater 71 °C.
Non-metallic Heads:	PVDF to 80 °C
	Polypropylene to 60 °C
Maximum Solids Size	200 microns
Inlet Port	1/2 inch BSPT
Discharge Port	3/8 inch BSPT
Shaft Rotation	Reverse (bi-directional)
Oil Capacity	0.12 litres
Weight (less motor)	
Metallic Heads:	9.7 kg
Non-metallic Heads:	8.7 kg
Dimensions (less motor)	
Metallic Heads:	252.2 mm W x 297.1 mm D x 175.8 mm H
Non-metallic Heads:	252.2 mm W x 301.5 mm D x 175.8 mm H

P100 with Brass pump head

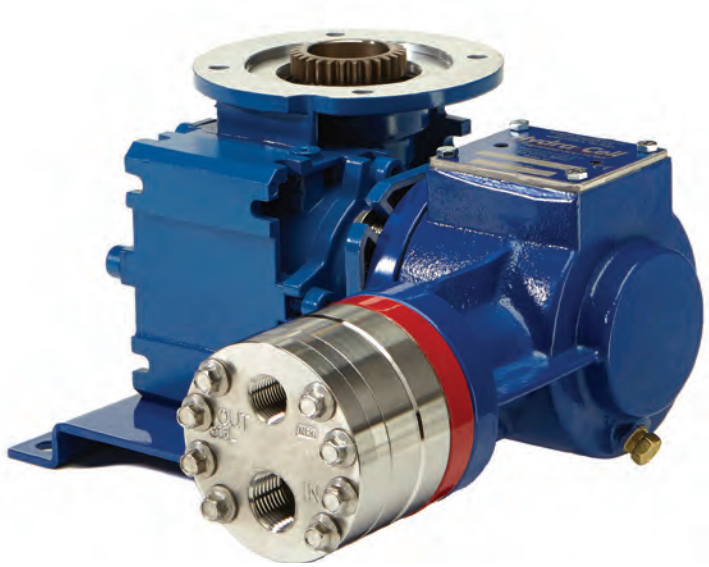

P100 with Stainless Steel pump head

P100 with Polypropylene pump head

Representative Drawings (mm)

Metallic Pump Heads

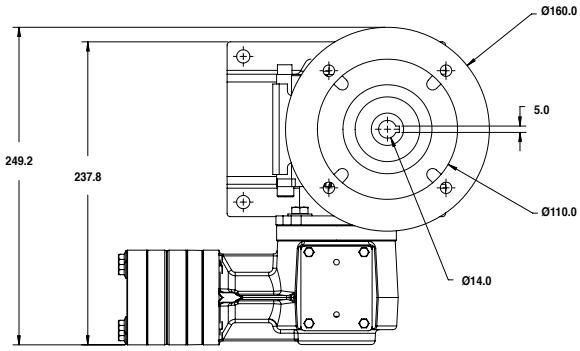

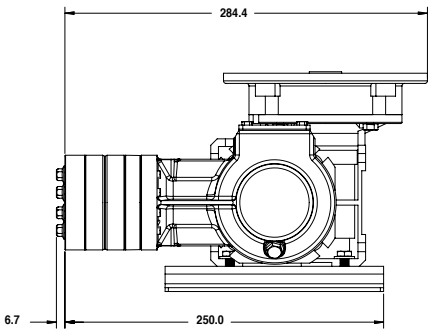

Hydra-Cell METERING SOLUTIONS™

Pump Ordering Information

A complete pump order number contains 13 digits based on the specified pump materials listed below. Contact your Hydra-Cell sales representative for accompanying motor drive options.

1	2	3	4	5	6	7	8	9	10	11	12	13
P	1	0	0									

Pump Model Size (Digits 1-4)

P100	For all P100 Pumps (Non Kel-Cell)

Pump Version (Digit 5)

N	NPT Ports (NEMA motors only)
M	BSPT Ports (IEC motors only)
A	ATEX BSPT Ports
	ATEX reducer must be ordered in conjunction with one of the kits below:
-	ATEX 2014/34/EU Certified, Category 2, Zone 1, **Hazardous Liquids**
-	ATEX 2014/34/EU Certified, Category 2, Zone 1, **Non-hazardous Liquids**
-	ATEX 2014/34/EU Certified, Category 3, Zone 2
	Note - All options include: Certificate, Oil Level Monitor, Earth Stud & Secondary ATEX Label

Pump Head / Retainer Material (Digit 6)

B	Brass / Hastelloy C
M	PVDF / PVDF
P	Polypropylene / Polypropylene
S	316L Stainless Steel / Hastelloy C
T	Hastelloy C / Hastelloy C

Diaphragm & O-ring Material / Oil (Digit 7)

A	Aflas / PTFE o-ring (Synthetic oil)
E	EPDM (EPDM-compatible oil)
S	FKM (Food-contact oil)
X	FKM (Synthetic oil)
J	PTFE (Food-contact oil)
W	PTFE (Synthetic oil)
	Note: PTFE diaphragms require flooded suction.
P	Neoprene (Synthetic oil)
R	Neoprene (Food-contact oil)
T	Buna-N (Synthetic oil)
F	Buna-N (Food-contact oil)

Check Valve Material (Digits 8-9)
(Valve Spring / Valve Seat / Valve)

SS	Elgiloy / 316L SST / Nitronic 50
TT	Hastelloy C / Hastelloy C / Hastelloy C
SC	Elgiloy / Ceramic / Ceramic
TC	Hastelloy C / Ceramic / Ceramic

Gearbox Ratio (Digits 10-12) IEC Motors

060	60:1	(63 B5 Motor Frame)
050	50:1	(63 B5 Motor Frame)
A40	40:1	(71 B5 Motor Frame)
A30	30:1	(71 B5 Motor Frame)
A25	25:1	(71 B5 Motor Frame)
A20	20:1	(71 B5 Motor Frame)
A15	15:1	(71 B5 Motor Frame)
A10	10:1	(71 B5 Motor Frame)
A07	7.5:1	(71 B5 Motor Frame)
A05	5:1	(71 B5 Motor Frame)

Note: These are Wanner standard options. Other flange sizes are available upon request.

Base Plate (Digit 13)

C	Carbon Steel (Epoxy painted)
S	316L Stainless Steel

Notes:

1. *Please consult factory for rpm below 6.*
2. *Constant torque drives are required to meet API 675 performance standards.*
3. *Ensure that the motor chosen is capable of delivering the torque and power required over the full range of adjustment. (Consult factory for values.)*
4. *IEC motor size has been calculated assuming IE2 performance as defined by IEC 60034-30.*

Hydra•Cell METERING SOLUTIONS™

Calibration Cylinders

Port Size	Cylinder Size (mL)	Cylinder Capacity (L/h)	Maximum Shaft (rpm)	Part Number BSPT Ports	Dimensions - mm Height	Diameter
PVC Cylinders						
1/2″	200	24	75	111-001-B	482.6	38.1
3/4″	1000	120	300	111-003-B	558.8	63.5
1″	2000	240	600	111-004-B	508.0	94.0
2″	10000	1200	--	111-006-B	635.0	176.5.0
Glass Cylinders						
1/4″	30	3.6	36	111-010-B	355.6	35.6
1/2″	200	24	75	111-011-B	533.4	63.5
3/4″	1000	120	300	111-013-B	685.8	88.9
1″	2000	240	600	111-014-B	685.8	127.0

Back Pressure & Pressure Relief Valves

Port Size	Maximum Flow (L/h) Pulsating	Wetted* Materials	Pressure Adjustment Range (bar)	Maximum Temp. (°C)	Part Number Back Pressure Valves (BSPT Ports)	Part Number Pressure Relief Valves (BSPT Ports)
3/8″ (DN 10)	757	Polypropylene	0.7 - 10.3	90	111-101-B	111-401-B
	757	PVDF	0.7 - 10.3	90	111-103-B	111-403-B
	757	316 SST	0.7 - 10.3	149	111-106-B	111-406-B
	757	Hastelloy C	0.7 - 10.3	149	111-110-B	111-410-B
3/8″ (DN 10)	757	316 SST	3.5 - 24	149	111-107-B	111-407-B
	757	Hastelloy C	3.5 - 24	149	111-111-B	111-411-B
3/8″ High Pressure (DN 10)	2650	316 SST	24 - 172	149		111-706-B
	2650	Hastelloy C	24 - 172	149		111-710-B

** Diaphragm material is PTFE on all models. Other materials available on request.*

Hastelloy® C is a registered trademark of Haynes International, Inc.

Pulsation Dampeners

Plastic Construction (4 cubic inch)

Bladder	Maximum bar	Polypropylene Part No.	Min./Max. Temperature Range*	PVDF Part No.	Min./Max. Temperature Range
Buna-N	10	110-999-B	0° to 79° C	110-020-B	-12° to 88° C
Neoprene	10	110-101-B	0° to 79° C	110-022-B	-12° to 93° C
EPDM	10	110-104-B	0° to 79° C	110-023-B	-12° to 121° C
FKM	10	110-106-B	0° to 79° C	110-026-B	-12° to 121° C
PTFE	10	110-109-B	5° to 79° C	110-028-B	5° to 121° C

Metallic Construction (4 cubic inch) (12 cubic inch)

Bladder	Maximum bar	SST Part No.	Maximum bar	Hastelloy C Part No.	Min./Max. Temperature Range*	Maximum bar	SST Part No.
Buna-N	69	110-060-B	69	110-090-B	-12° to 88° C	276	110-370-B
Neoprene	69	110-062-B	41	110-092-B	-18° to 93° C		N/A
EPDM	69	110-063-B	69	110-093-B	-40° to 140° C	276	110-373-B
FKM	69	110-065-B	41	110-095-B	-23° to 177° C	276	110-375-B
PTFE	69	110-068-B	41	110-098-B	5° to 121° C	138	110-368-B

** Applies to 4-cu-in. and 12-cu-in. metallic models.*

P100 Version 5 11/16

Metering and Dosing Control Options

Electronic Flow Rate Adjustment for Local Control

- Force-cooled Drives supplied as standard
- ATEX Dust Zone 21 (Ex tb III C T125c Db)
- IP66 Standard
- Various flow rate adjustments options including:
  1. On-board potentiometer(s)
  2. On-board key-pad controller with flow rate display
  3. Removable, hand-held key-pad controller for authorised personnel only
  4. Use the 10:1 Turndown table on Page 2 to select the correct motor kW for ambient temperatures up to 25˚C

Maximum Flow at Designated Pressure (see table on Page 2)

On-board keypad control

Hand-held keypad control

Control Freak™ for Sophisticated Local Control

- Option available to control up to 6 x Hydra-Cell pumps with one Hydra-Cell "Control Freak"
- Multiple Variable Frequency Dive (VFD) options
- Enables programming for flow rate or totalisation
- Allows up to 10 x separate batch sequences
- Built-in Calibration mode

Hydra-Cell® METERING SOLUTIONS™

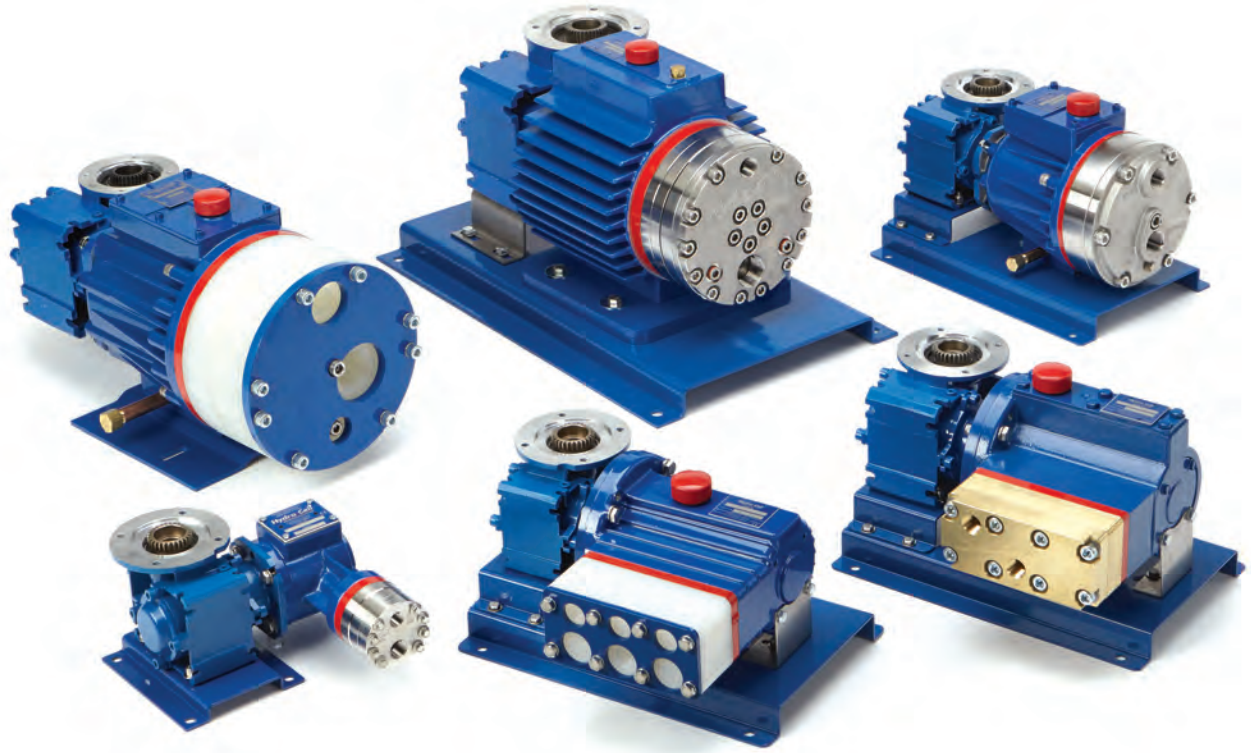

Standards Compliance

ATEX

- API 675 performance testing, both witnessed and non-witnessed available (consult your local Wanner office for further details)

Hydra-Cell® Seal-less Pumps from Wanner: Partners in more than 70 Countries Worldwide.

WANNER ENGINEERING
WORLD HEADQUARTERS & MANUFACTURING
Minneapolis USA
t: +1 612-332-5681
e: sales@wannereng.com

WANNER ENGINEERING
Latin American Office
t: +55 (11) 4081-7098
e: sales@wannereng.com

WANNER INTERNATIONAL
Hampshire UK
t: +44 (0) 1252 816847
e: sales@wannerint.com

WANNER PUMPS
Shanghai CHINA
t: +86-21-6876 3700
e: sales@wannerpumps.com

WANNER PUMPS
Kowloon HONG KONG
t: +852 3428 6534
e: sales@wannerpumps.com

WANNER Hydra-Cell® Seal-less Pumping Technology

www.hydra-cell.eu

OFFICIAL UK DISTRIBUTOR:
Michael Smith Engineers Limited
www.michael-smith-engineers.co.uk
freephone: 0800 316 7891

P100 Version 5 11/16