312F SEALED
312F-MC MAG-DRIVE

Liquiflo
3-SERIES
ROTOGEAR®
GEAR PUMP

Sealed

Mag-Drive

PORT SIZE	$1^1/_2$" FLG or $1^1/_4$" NPT/BPST
MAX FLOW	29 GPM; 110 LPM
MAX DIFFERENTIAL PRESSURE	100 PSI; 7 BAR
MAX DISCHARGE PRESSURE	270 PSI; 18.6 BAR
MAX TEMPERATURE	500˚F; 260˚C
MIN TEMPERATURE	-40˚F; -40˚C
MAX VISCOSITY	100,000* CPS
NPSHR @ 1150 RPM	5 FT; 1.5 M
LIFT (DRY)	17 FT; 5.2 M
WEIGHT (without motor)	
SEALED	52 LBS; 23.6 KGS
MAG-DRIVE	70 LBS; 31.8 KGS

* Higher viscosities possible. Contact factory.

PERFORMANCE CURVES

1 CPS Fluid (Water)

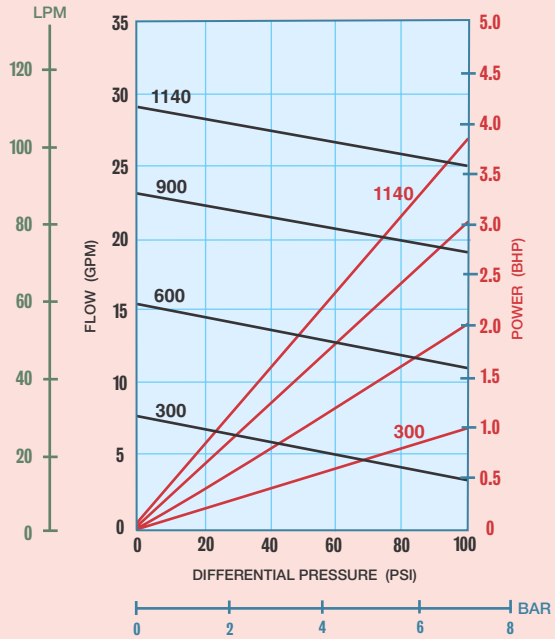

100 CPS Fluid (Oil)

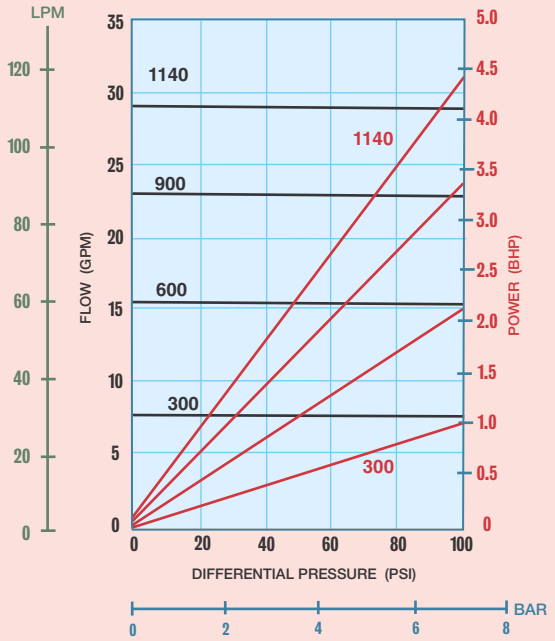

Dimensional Data (inches)

312F Sealed (Long-coupled only)

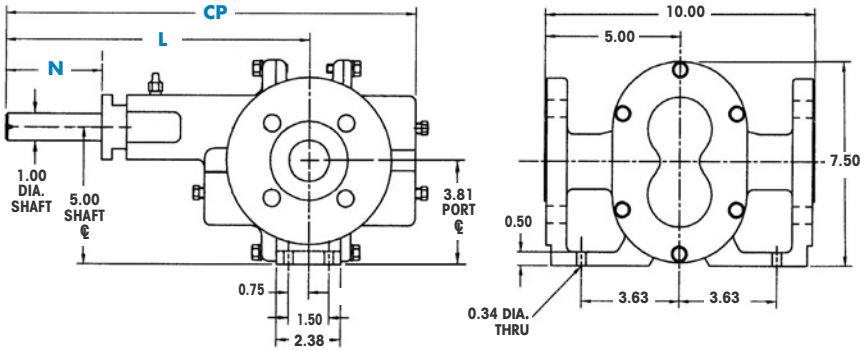

DIMENSION	SEAL CONFIGURATIONS: SINGLE MECHANICAL SEAL DOUBLE MECHANICAL SEAL	SEAL CONFIGURATIONS: PACKING
CP(1)	15.19	15.19
N	3.75 (2)	3.69
L	11.25	11.25

NOTES: (1) Add .312 inches for Bearing Flush Plug.
(2) Minimum dimension.

Dimensional Data (inches)

312F-MC Mag-Drive (Long-coupled only)

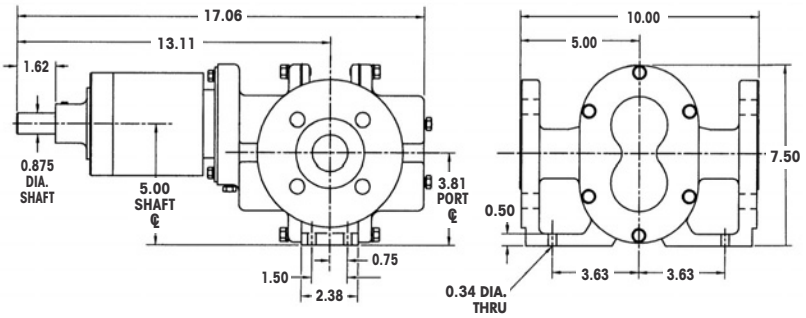

tel. 908.518.0777 fax. 908.518.1847

OFFICIAL UK DISTRIBUTOR: Michael Smith Engineers Limited Website: www.michael-smith-engineers.co.uk Freephone: 0800 316 7891