# 314F SEALED
# 314F-MC MAG-DRIVE

Liquiflo
3-SERIES
ROTOGEAR®
GEAR PUMP

Sealed

Mag-Drive

| | |
|---|---|
| PORT SIZE | 2 1/2" FLG |
| MAX FLOW | 58 GPM; 220 LPM |
| MAX DIFFERENTIAL PRESSURE | 100 PSI; 7 BAR |
| MAX DISCHARGE PRESSURE | 270 PSI; 18.6 BAR |
| MAX TEMPERATURE | 500˚F; 260˚C |
| MIN TEMPERATURE | -40˚F; -40˚C |
| MAX VISCOSITY | 100,000* CPS |
| NPSHR @ 1150 RPM | 3 FT; 0.9 M |
| LIFT (DRY) | 20 FT; 6.1 M |
| WEIGHT (without motor) | |
| SEALED | 67 LBS; 30.4 KGS |
| MAG-DRIVE | 85 LBS; 38.6 KGS |

* Higher viscosities possible. Contact factory.

## PERFORMANCE CURVES

### 1 CPS Fluid (Water)

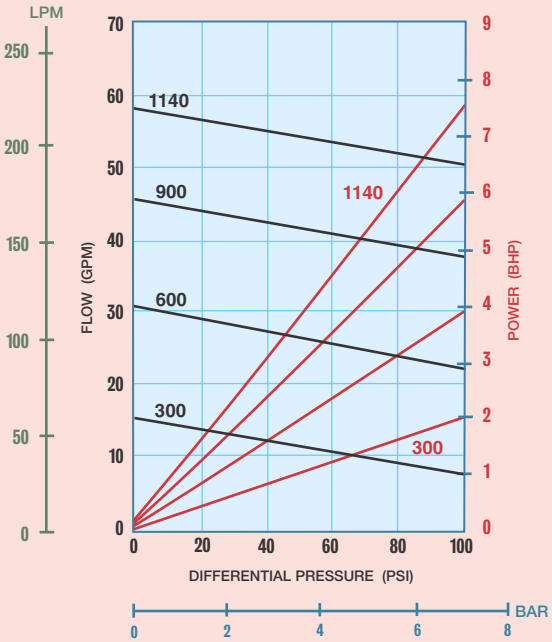


### 100 CPS Fluid (Oil)

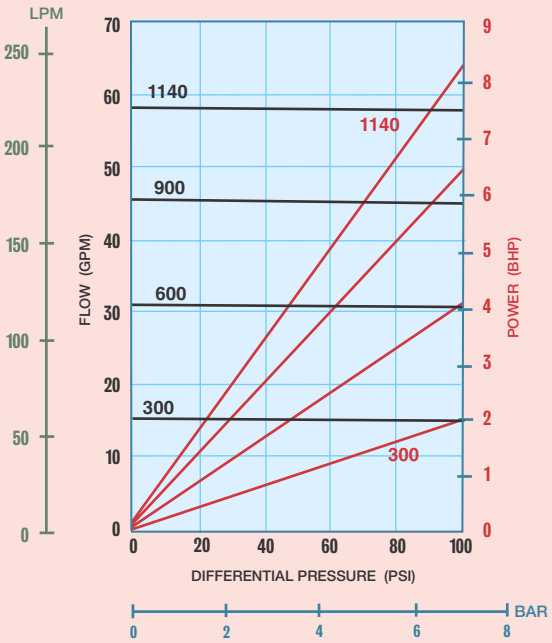


Dimensional Data (inches)

## 314F Sealed (Long-coupled only)

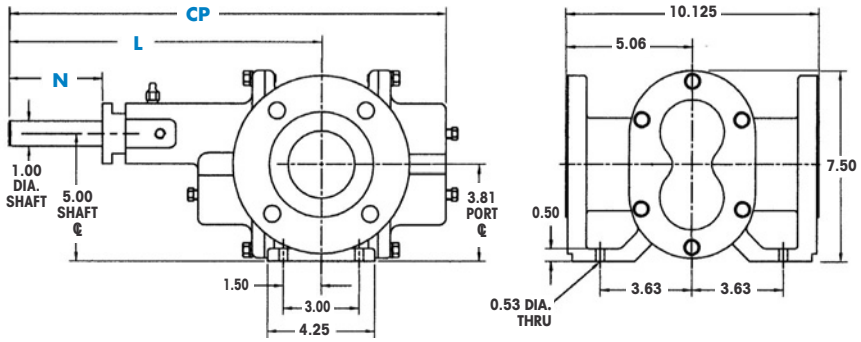


| DIMENSION | SEAL CONFIGURATIONS: SINGLE MECHANICAL SEAL DOUBLE MECHANICAL SEAL | SEAL CONFIGURATIONS: PACKING |
|---|---|---|
| CP(1) | 19.69 | 19.69 |
| N | 6.25 (2) | 6.18 |
| L | 14.75 | 14.75 |

NOTES: (1) Add .312 inches for Bearing Flush Plug.
(2) Minimum dimension.

Dimensional Data (inches)

## 314F-MC Mag-Drive (Long-coupled only)

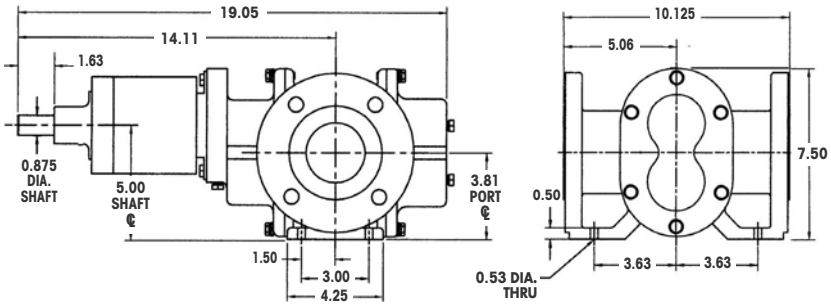




tel. 908.518.0777 fax. 908.518.1847
OFFICIAL UK DISTRIBUTOR:
Michael Smith Engineers Ltd www.michael-smith-engineers.co.uk 0800 316 7891