33F SEALED
33F-MC MAG-DRIVE

Liquiflo

3-SERIES ROTOGEAR® GEAR PUMP

Sealed

Close Coupled: Sealed or Mag-Drive

PORT SIZE	1/4" NPT/BSPT or 1/2" FLG
MAX FLOW	1.4 GPM; 5.3 LPM
MAX DIFFERENTIAL PRESSURE	100 PSI; 7 BAR
MAX DISCHARGE PRESSURE	300 PSI; 20.7 BAR
MAX TEMPERATURE	500˚F; 260˚C
MIN TEMPERATURE	-40˚F; -40˚C
MAX VISCOSITY	100,000* CPS
NPSHR @ 1750 RPM	2 FT; 0.6 M
LIFT (DRY)	1.5 FT; 0.45 M
WEIGHT (without motor)	
SEALED	2.5 LBS; 1.1 KGS
MAG-DRIVE	31 LBS; 14 KGS

* Higher viscosities possible. Contact factory.

PERFORMANCE CURVES

1 CPS Fluid (Water)

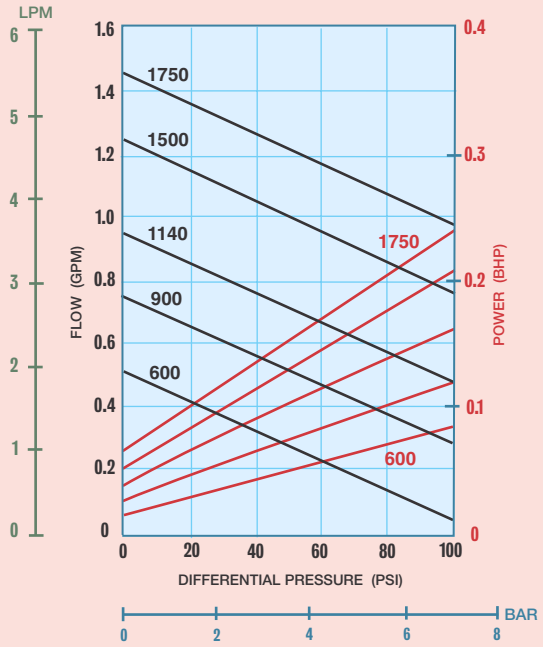

100 CPS Fluid (Oil)

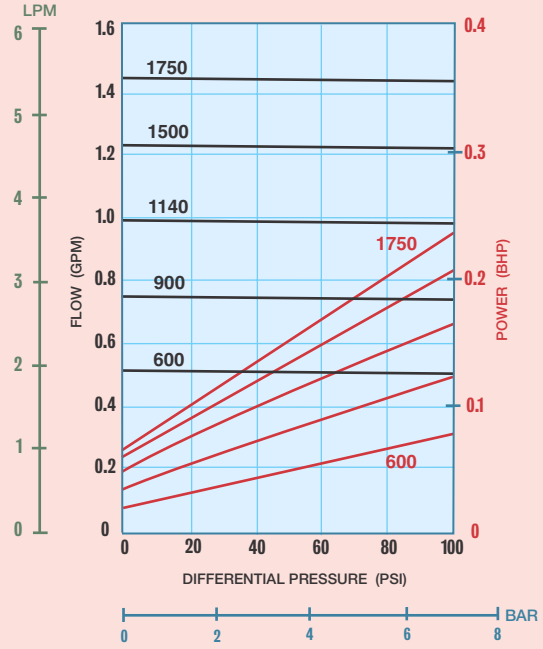

Dimensional Data (inches)

Long-Coupled: 33F Sealed

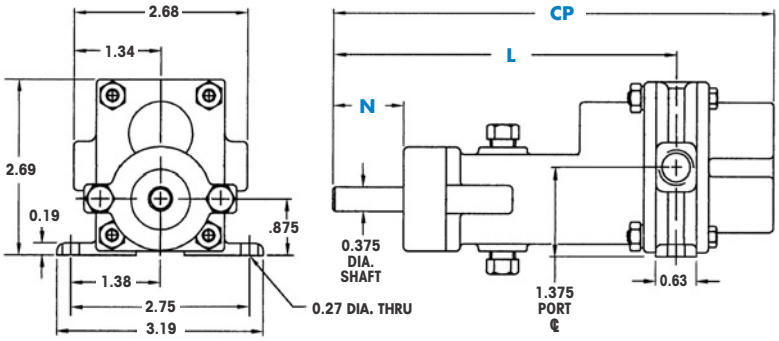

DIMENSION	SEAL CONFIGURATIONS: PACKING / SINGLE MECHANICAL SEAL / DOUBLE MECHANICAL SEAL	EXTERNAL MECHANICAL SEAL	LIP SEAL
CP(1)	6.95	7.66	6.94
N	0.81(2)	1.03	0.81
L	5.44	6.16	5.44

NOTES: (1) Add .312 inches for Bearing Flush Plug.
(2) Minimum dimension.

Dimensional Data (inches)

Close-Coupled: 33F-MC & 33F Sealed

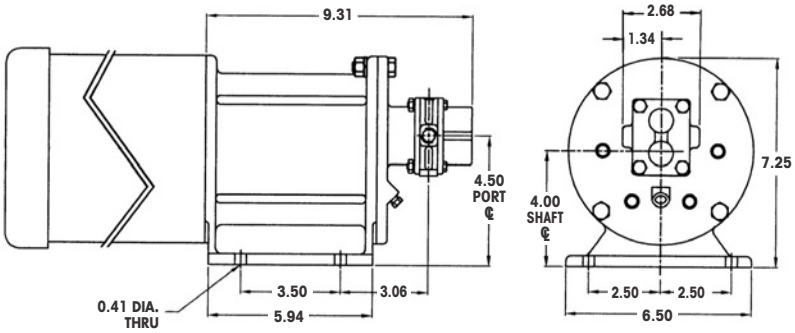

tel. 908.518.0777 fax. 908.518.1847

OFFICIAL UK DISTRIBUTOR: Michael Smith Engineers Limited
www.michael-smith-engineers.co.uk Freephone: 0800 316 7891