35F SEALED
35F-MC MAG-DRIVE

Liquiflo
3-SERIES
ROTOGEAR®
GEAR PUMP

Sealed

Close Coupled:
Sealed or Mag-Drive

PORT SIZE	1/2" NPT/BSPT/FLG
MAX FLOW	3.4 GPM; 12.9 LPM
MAX DIFFERENTIAL PRESSURE	100 PSI; 7 BAR
MAX DISCHARGE PRESSURE	300 PSI; 20.7 BAR
MAX TEMPERATURE	500˚F; 260˚C
MIN TEMPERATURE	-40˚F; -40˚C
MAX VISCOSITY	100,000* CPS
NPSHR @ 1750 RPM	2 FT; 0.6 M
LIFT (DRY)	4 FT; 1.2 M
WEIGHT (without motor)	
SEALED	3.5 LBS; 1.6 KGS
MAG-DRIVE	32 LBS; 15 KGS

* Higher viscosities possible. Contact factory.

PERFORMANCE CURVES

1 CPS Fluid (Water)

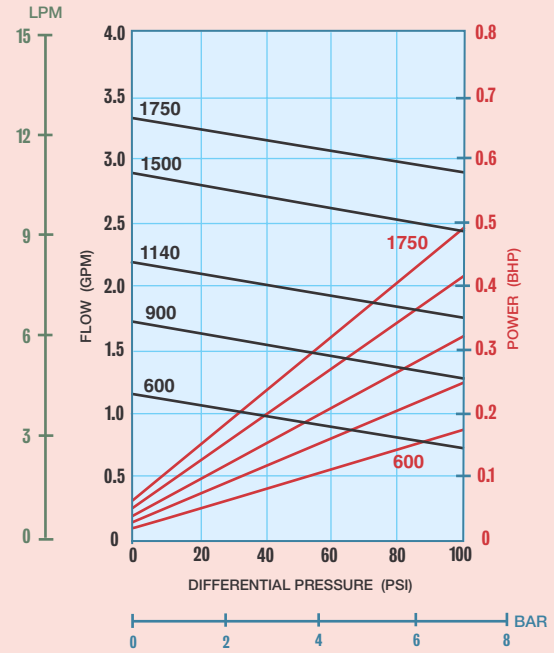

100 CPS Fluid (Oil)

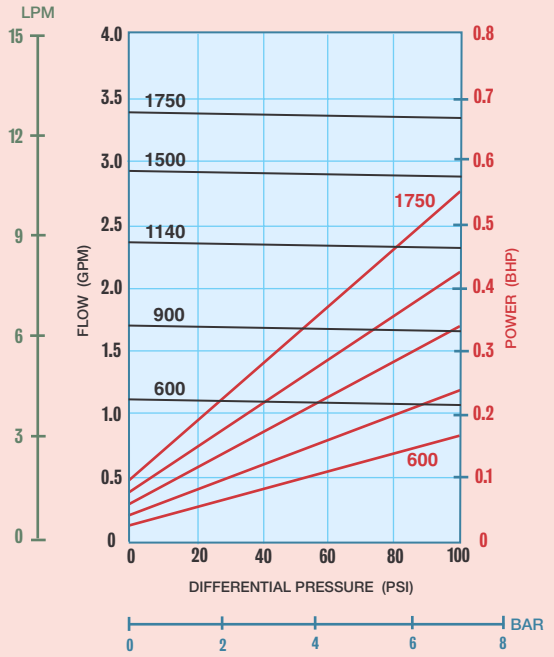

Dimensional Data (inches)

Long-Coupled: 35F Sealed

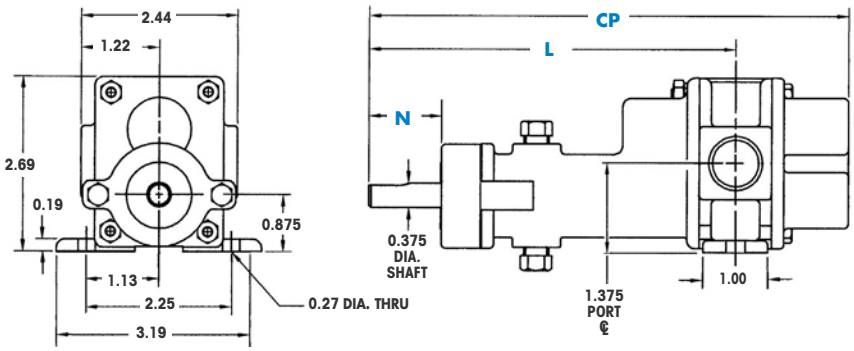

DIMENSION	SEAL CONFIGURATIONS: PACKING SINGLE MECHANICAL SEAL DOUBLE MECHANICAL SEAL	EXTERNAL MECHANICAL SEAL	LIP SEAL
CP(1)	7.44	8.56	7.44
N	0.80 (2)	1.42	0.80
L	5.67	6.81	5.67

NOTES: (1) Add .312 inches for Bearing Flush Plug.
(2) Minimum dimension.

Dimensional Data (inches)

Close-Coupled: 35F-MC & 35F Sealed

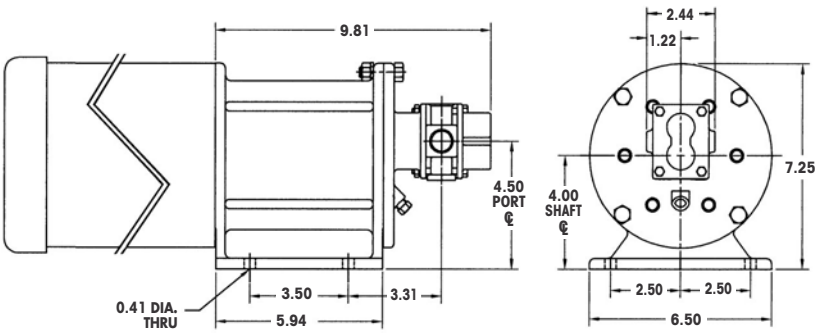

tel. 908.518.0777 fax. 908.518.1847
OFFICIAL UK DISTRIBUTOR: Michael Smith Engineers Limited
www.michael-smith-engineers.co.uk Freephone: 0800 316 7891