37F SEALED
37F-MC MAG-DRIVE

Liquiflo
3-SERIES
ROTOGEAR®
GEAR PUMP

Sealed

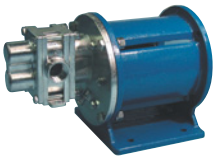

Close Coupled:
Sealed or Mag-Drive

PORT SIZE	3/4" NPT/BSPT/FLG
MAX FLOW	10.7 GPM; 40.5 LPM
MAX DIFFERENTIAL PRESSURE	100 PSI; 7 BAR
MAX DISCHARGE PRESSURE	225 PSI; 15.5 BAR
MAX TEMPERATURE	500˚F; 260˚C
MIN TEMPERATURE	-40˚F; -40˚C
MAX VISCOSITY	100,000* CPS
NPSHR @ 1750 RPM	5.2 FT; 1.6 M
LIFT (DRY)	7 FT; 2.1 M
WEIGHT (without motor)	
SEALED	6.5 LBS; 3 KGS
MAG-DRIVE	36 LBS; 16 KGS

* Higher viscosities possible. Contact factory.

PERFORMANCE CURVES

1 CPS Fluid (Water)

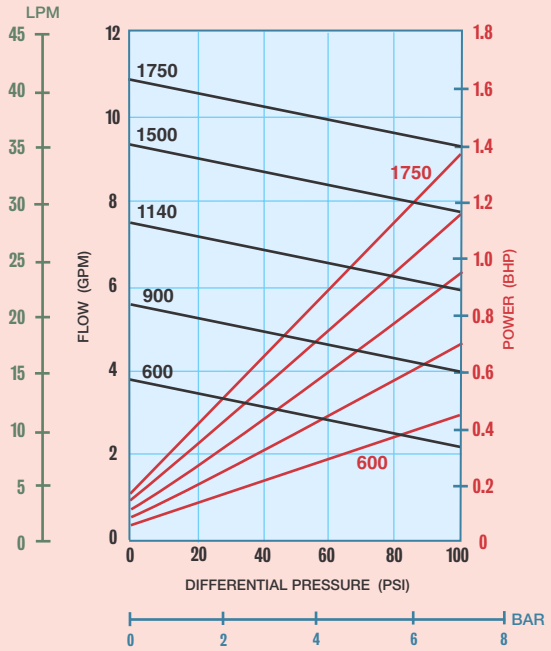

100 CPS Fluid (Oil)

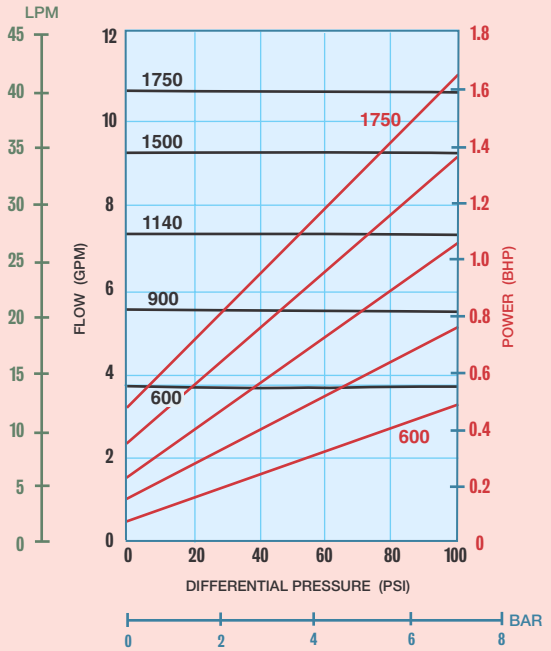

Dimensional Data (inches)

Long-Coupled: 37F Sealed

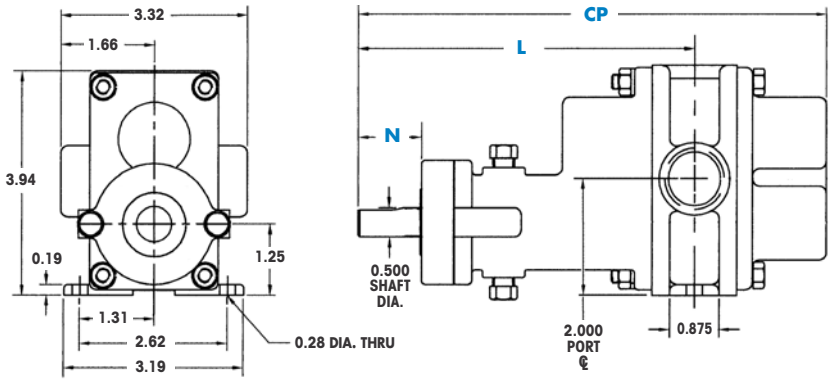

DIMENSION	SEAL CONFIGURATIONS: PACKING SINGLE MECHANICAL SEAL DOUBLE MECHANICAL SEAL	EXTERNAL MECHANICAL SEAL	LIP SEAL
CP(1)	8.31	10.44	8.31
N	0.81(2)	2.31	0.81
L	5.98	8.10	5.98

NOTES: (1) Add .312 inches for Bearing Flush Plug.
(2) Minimum dimension.

Dimensional Data (inches)
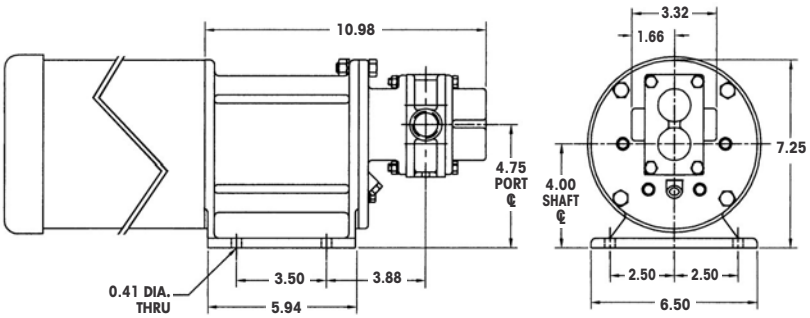
Close-Coupled: 37F-MC & 37F Sealed