39F SEALED
39F-MC MAG-DRIVE

Liquiflo
3-SERIES
ROTOGEAR®
GEAR PUMP

Sealed

Close Coupled:
Sealed or Mag-Drive

PORT SIZE	1 1/4" NPT/BSPT/FLG
MAX FLOW	21.5 GPM; 81.4 LPM
MAX DIFFERENTIAL PRESSURE	100 PSI; 7 BAR
MAX DISCHARGE PRESSURE	225 PSI; 15.5 BAR
MAX TEMPERATURE	500˚F; 260˚C
MIN TEMPERATURE	-40˚F; -40˚C
MAX VISCOSITY	100,000* CPS
NPSHR @ 1750 RPM	3 FT; 0.96 M
LIFT (DRY)	14 FT; 4.2 M
WEIGHT (without motor)	
SEALED	9.8 LBS; 4.4 KGS
MAG-DRIVE	40 LBS; 18 KGS

* Higher viscosities possible. Contact factory.

PERFORMANCE CURVES

1 CPS Fluid (Water)

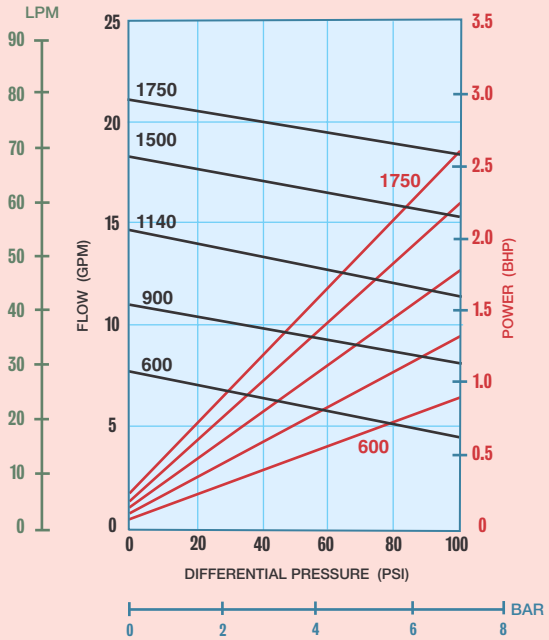

100 CPS Fluid (Oil)

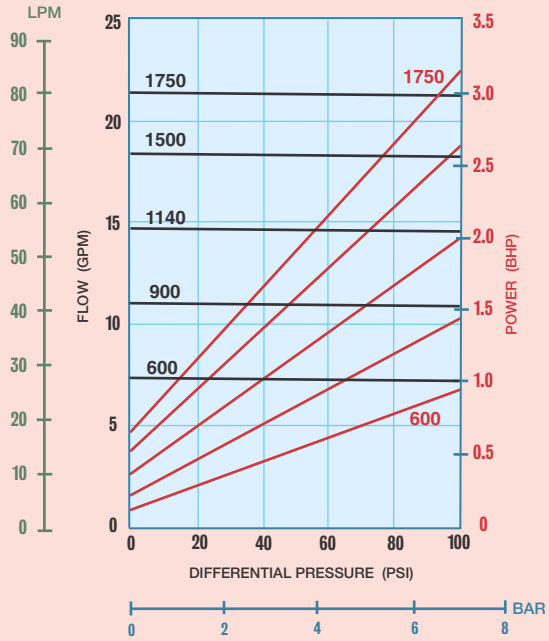

Dimensional Data (inches)

Long-Coupled: 39F Sealed

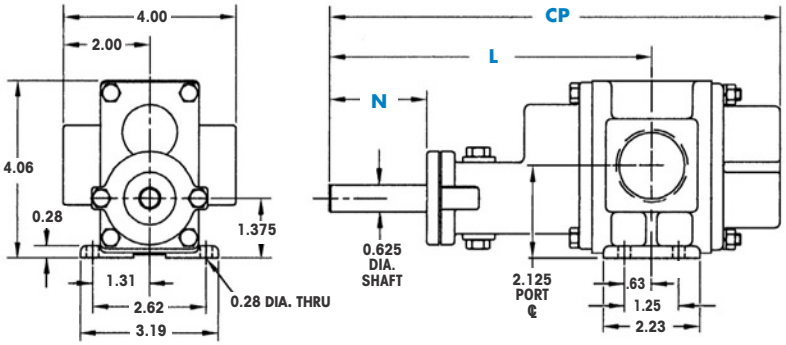

DIMENSION	SEAL CONFIGURATIONS: PACKING SINGLE MECHANICAL SEAL DOUBLE MECHANICAL SEAL	EXTERNAL MECHANICAL SEAL	LIP SEAL
CP(1)	10.44	10.44	10.44
N	1.68 (2)	1.06	1.68
L	7.47	7.47	7.47

NOTES: (1) Add .312 inches for Bearing Flush Plug.
(2) Minimum dimension.

Dimensional Data (inches)

Close-Coupled: 39F-MC & 39F Sealed

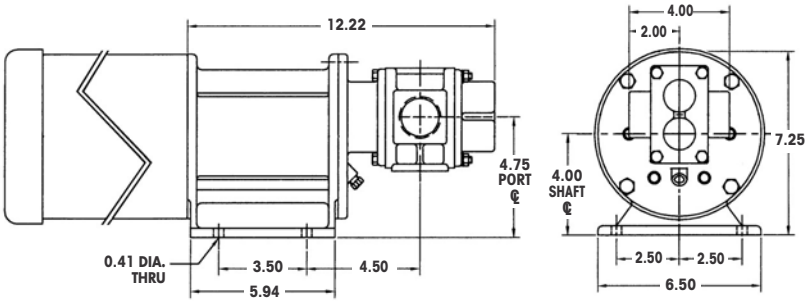

tel. 908.518.0777 fax. 908.518.1847
OFFICIAL UK DISTRIBUTOR: Michael Smith Engineers Limited
www.michael-smith-engineers.co.uk Freephone: 0800 316 7891