39R SEALED
39R-MC MAG-DRIVE

Liquiflo™
3-SERIES
ROTOGEAR®
GEAR PUMP

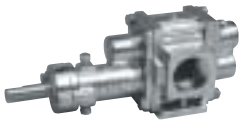

Sealed

Close Coupled:
Sealed or Mag-Drive

PORT SIZE	1" NPT/BSPT/FLG
MAX FLOW	15 GPM; 57 LPM
MAX DIFFERENTIAL PRESSURE	100 PSI; 7 BAR
MAX DISCHARGE PRESSURE	225 PSI; 15.5 BAR
MAX TEMPERATURE	500˚F; 260˚C
MIN TEMPERATURE	-40˚F; -40˚C
MAX VISCOSITY	100,000* CPS
NPSHR @ 1750 RPM	4 FT; 1.2 M
LIFT (DRY)	6 FT; 1.8 M
WEIGHT (without motor) SEALED MAG-DRIVE	 8 LBS; 3.6 KGS 38 LBS; 17 KGS

* Higher viscosities possible. Contact factory.

PERFORMANCE CURVES

1 CPS Fluid (Water)

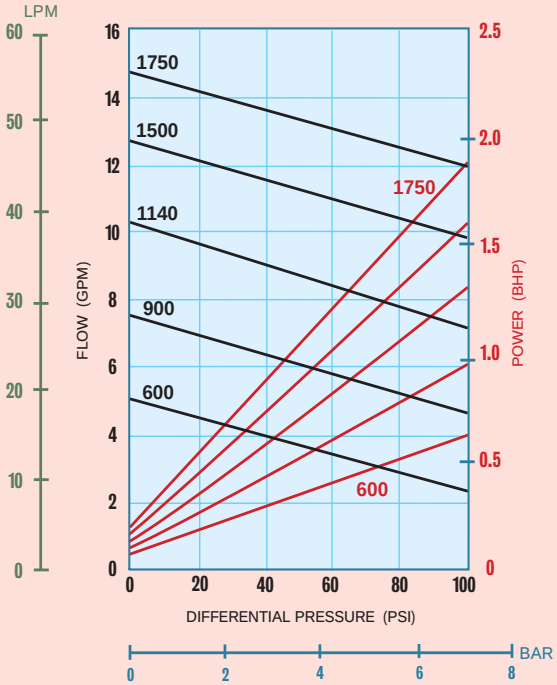

100 CPS Fluid (Oil)

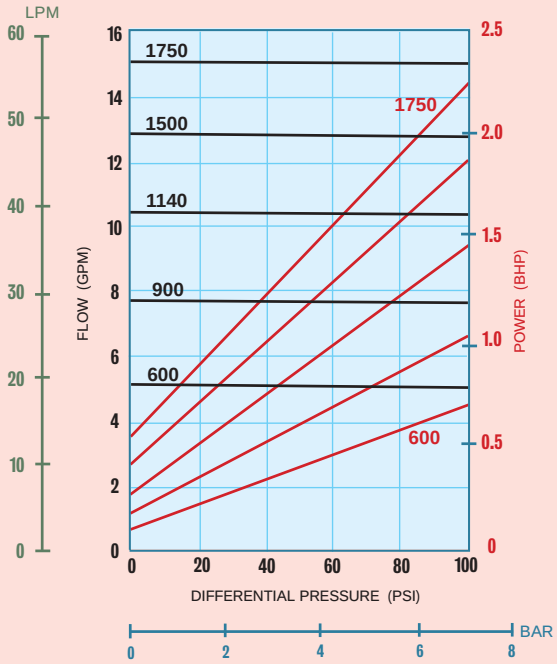

Dimensional Data (inches)

Long-Coupled: 39R Sealed

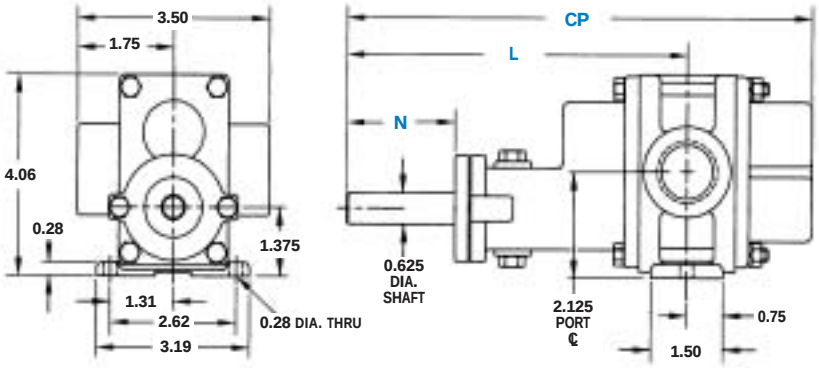

DIMENSION	SEAL CONFIGURATIONS PACKING SINGLE MECHANICAL SEAL DOUBLE MECHANICAL SEAL	EXTERNAL MECHANICAL SEAL	LIP SEAL
CP(1)	9.69	9.69	9.69
N	1.68 (2)	1.44	1.68
L	7.09	7.09	7.09

NOTES: (1) Add .312 inches for Bearing Flush Plug.
(2) Minimum dimension.

Dimensional Data (inches)

Close-Coupled: 39R-MC & 39R Sealed

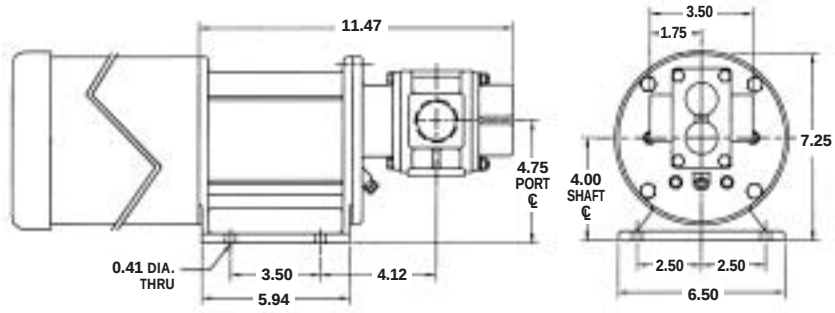

tel. 908.518.0777 fax. 908.518.1847
OFFICIAL UK DISTRIBUTOR: Michael Smith Engineers Limited
www.michael-smith-engineers.co.uk Freephone: 0800 316 7891