H12R SEALED
H12R-MC MAG-DRIVE

Liquiflo™
H-SERIES
GEAR PUMP

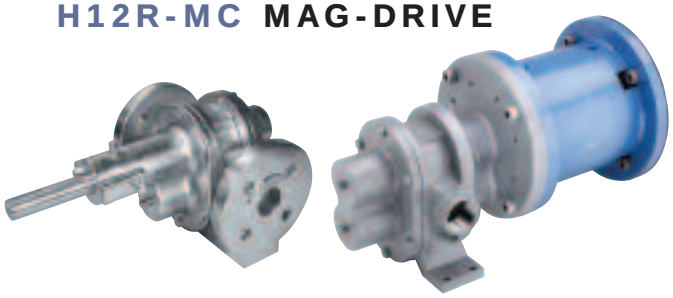

Sealed, Long-Coupled

Sealed or Mag-Drive, Close-Coupled

PORT SIZE	1 1/2" FLG or 1 1/4" NPT/BSPT
MAX FLOW	22 GPM; 83 LPM
MAX DIFFERENTIAL PRESSURE	225 PSI; 15.5 BAR
MAX DISCHARGE PRESSURE	270 PSI; 18.6 BAR
MAX TEMPERATURE	500˚F; 260˚C
MIN TEMPERATURE	-40˚F; -40˚ C
MAX VISCOSITY	100,000* CPS
NPSHR @ 1150 RPM	5 FT; 1.5 M
LIFT (DRY)	15 FT; 4.5 M
WEIGHT (without motor)	
SEALED, Long-Coupled	52 LBS; 24 KGS
SEALED, Close-Coupled	77 LBS; 35 KGS
MAG-DRIVE, Close-Coupled	95 LBS; 43 KGS

* Higher viscosities possible. Contact factory.

PERFORMANCE CURVES

1 CPS Fluid (Water)

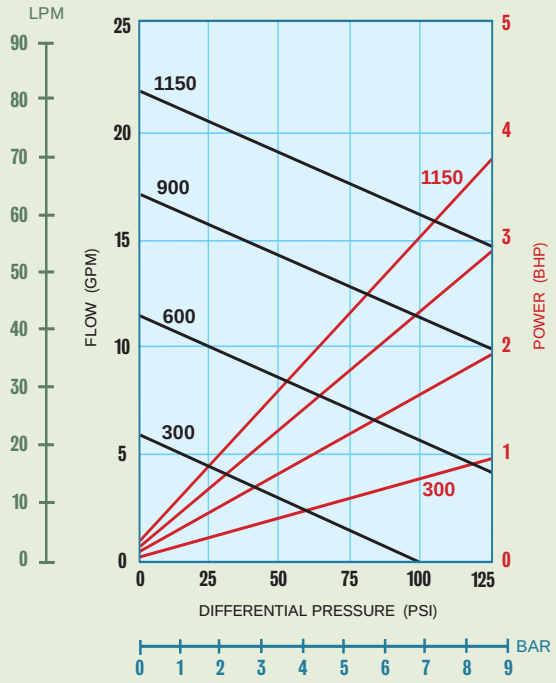

100 CPS Fluid (Oil)

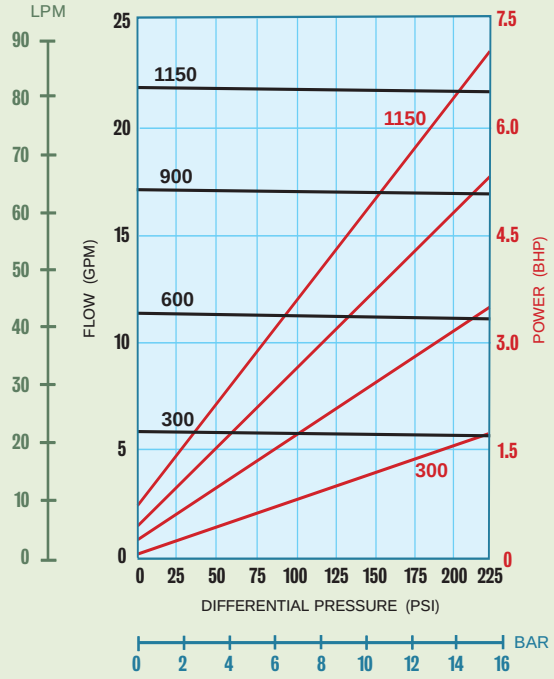

Dimensional Data (inches) **H12R Sealed, Long-Coupled**

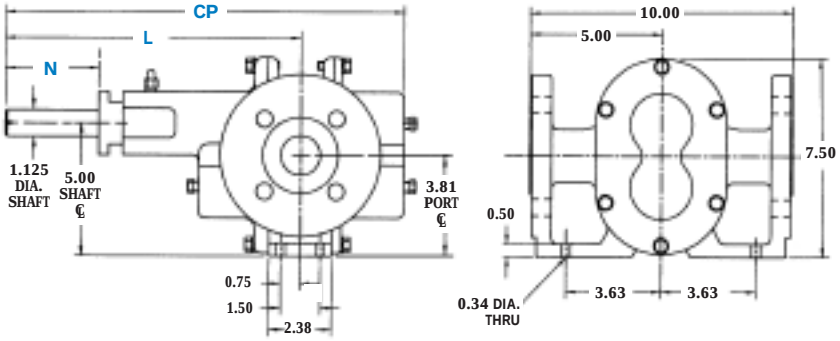

DIMENSION	SEAL CONFIGURATIONS: SINGLE & DOUBLE MECHANICAL SEALS	SEAL CONFIGURATIONS: PACKING
CP(1)	13.69	13.69
L	9.75	9.75
N	2.56	2.28 (2)

NOTES: (1) Add .31 inches for Bearing Flush Plugs.
(2) Minimum dimension.

Dimensional Data (inches) **H12R-MC & H12R Sealed, Close-Coupled**

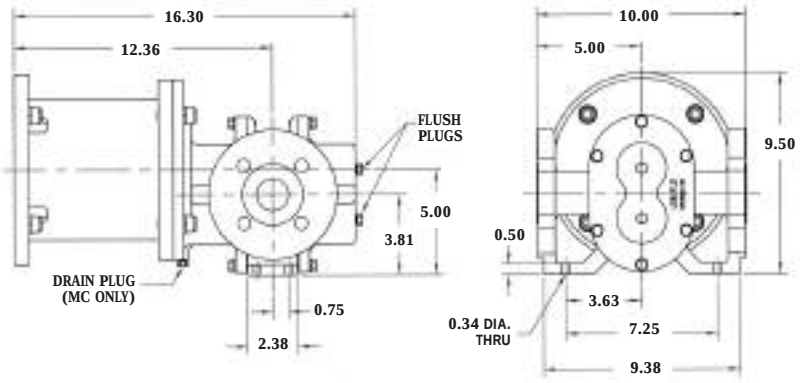

tel. 908.518.0777 fax. 908.518.1847
OFFICIAL UK DISTRIBUTOR: Michael Smith Engineers Limited
www.michael-smith-engineers.co.uk Freephone: 0800 316 7891