# H5R SEALED
# H5R-MC MAG-DRIVE

Liquiflo™
H-SERIES
ROTOGEAR®
GEAR PUMP

Sealed

Close Coupled:
Sealed or Mag-Drive

| | |
|---|---|
| PORT SIZE | 1/2" NPT/BSPT/FLG |
| MAX FLOW | 2.4 GPM; 9.1 LPM |
| MAX DIFFERENTIAL PRESSURE | 225 PSI; 15.5 BAR |
| MAX DISCHARGE PRESSURE | 300 PSI; 20.7 BAR |
| MAX TEMPERATURE | 500˚F; 260˚C |
| MIN TEMPERATURE | -40˚F; -40˚C |
| MAX VISCOSITY | 100,000* CPS |
| NPSHR @ 1750 RPM | 2 FT; 0.6 M |
| LIFT (DRY) | 2 FT; 0.6 M |
| WEIGHT (without motor)<br>SEALED<br>MAG-DRIVE | <br>3.5 LBS; 1.6 KGS<br>32 LBS; 15 KGS |

* Higher viscosities possible. Contact factory.

## PERFORMANCE CURVES

### 1 CPS Fluid (Water)

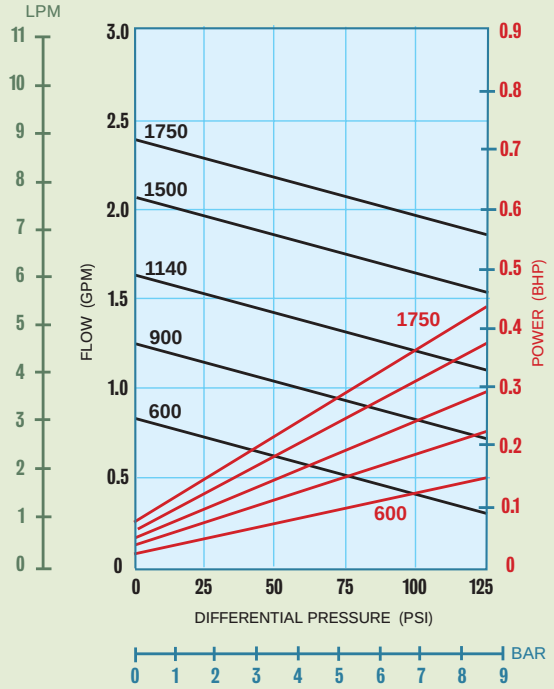


### 100 CPS Fluid (Oil)

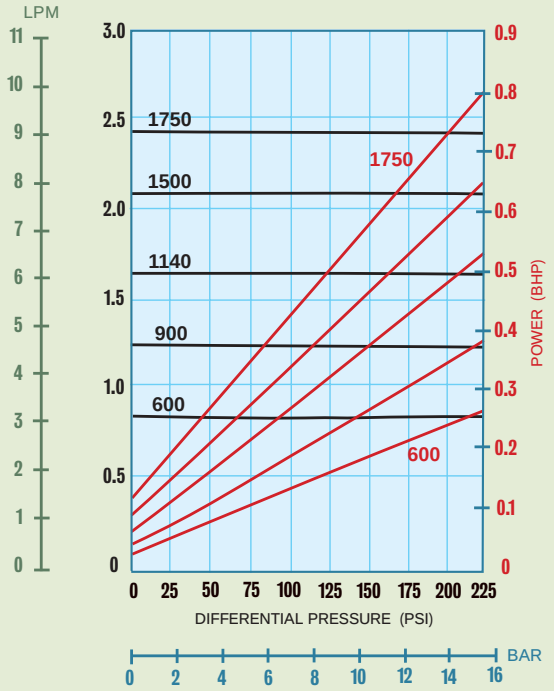


Dimensional Data (inches)

## Long-Coupled: H5R Sealed

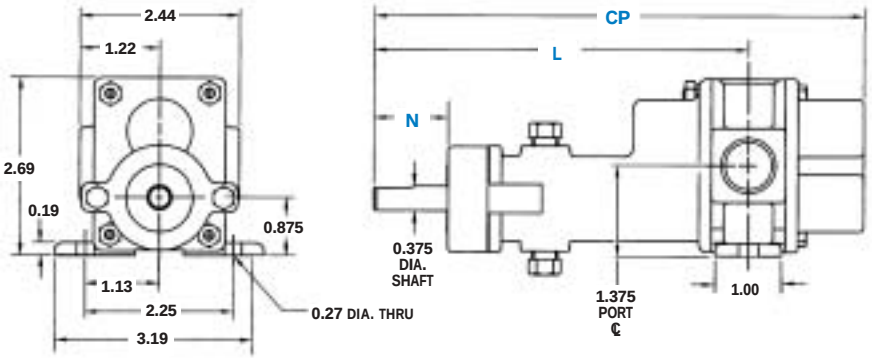


| DIMENSION | SEAL CONFIGURATIONS<br>PACKING<br>SINGLE MECHANICAL SEAL<br>DOUBLE MECHANICAL SEAL |
|---|---|
| CP(1) | 7.44 |
| N | 0.80 (2) |
| L | 5.67 |

NOTES: (1) Add .312 inches for Bearing Flush Plug.
(2) Minimum dimension.

Dimensional Data (inches)
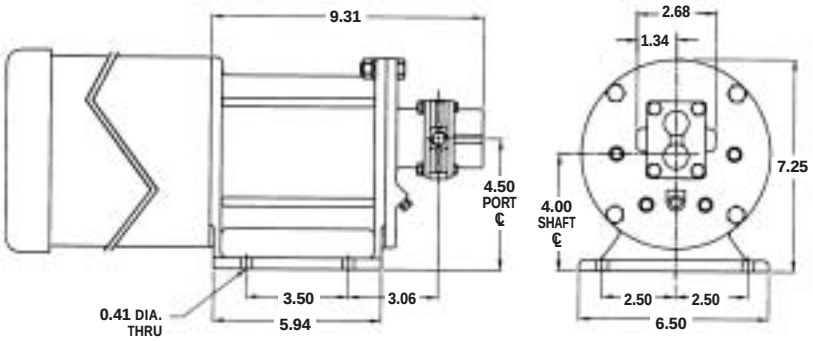
## Close-Coupled: H5R-MC & H5R Sealed