Chocolate and Confectionery Series with OSB Sealing

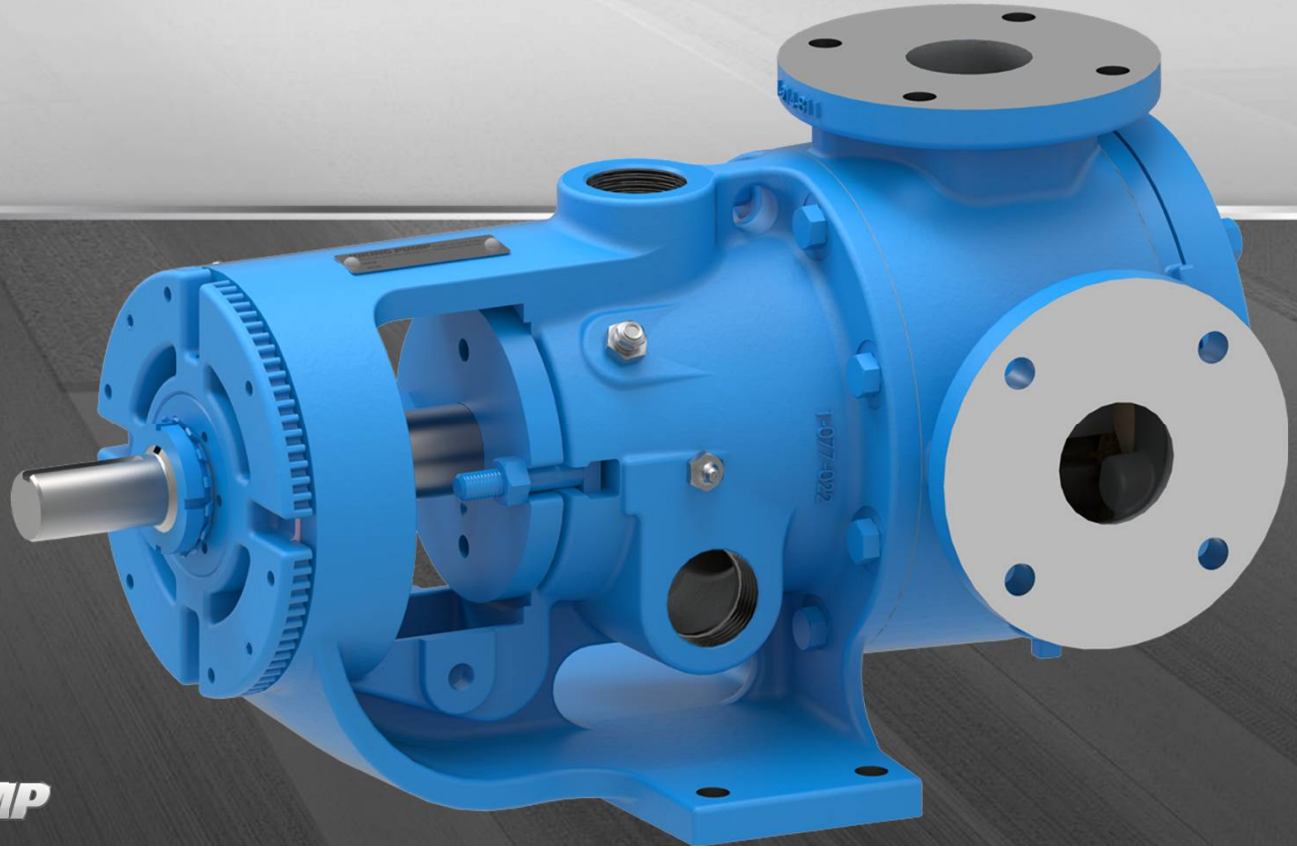

VIKING PUMP

IDEX FLUID & METERING

Viking Pumps Move a Lot of Chocolate

Customers Told Us What They Like

- Reliable
- Low maintenance
- Easy to repair

And They Told Us What They Want

- Leakage Prevention
- Reliability
- A “Chocolate Pump” that enables Commonality
- Food Safety

So we’re giving them what they asked for!

Leakage Prevention

O-Ring Seal Bushing (OSB)

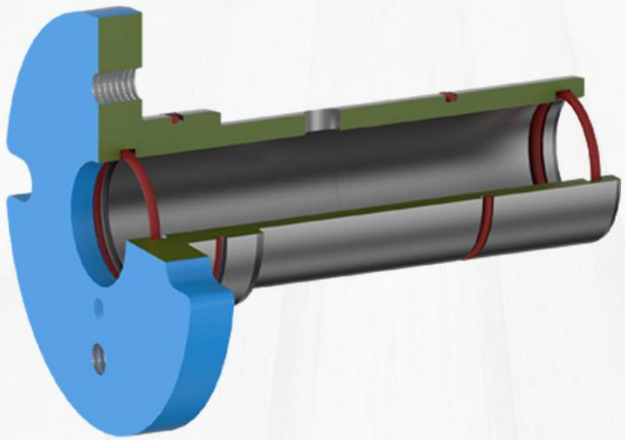

Combined bracket bushing and seal gland, with double O-ring seals, in hardened cast iron, with back-pull-out accessibility

Leakage Prevention

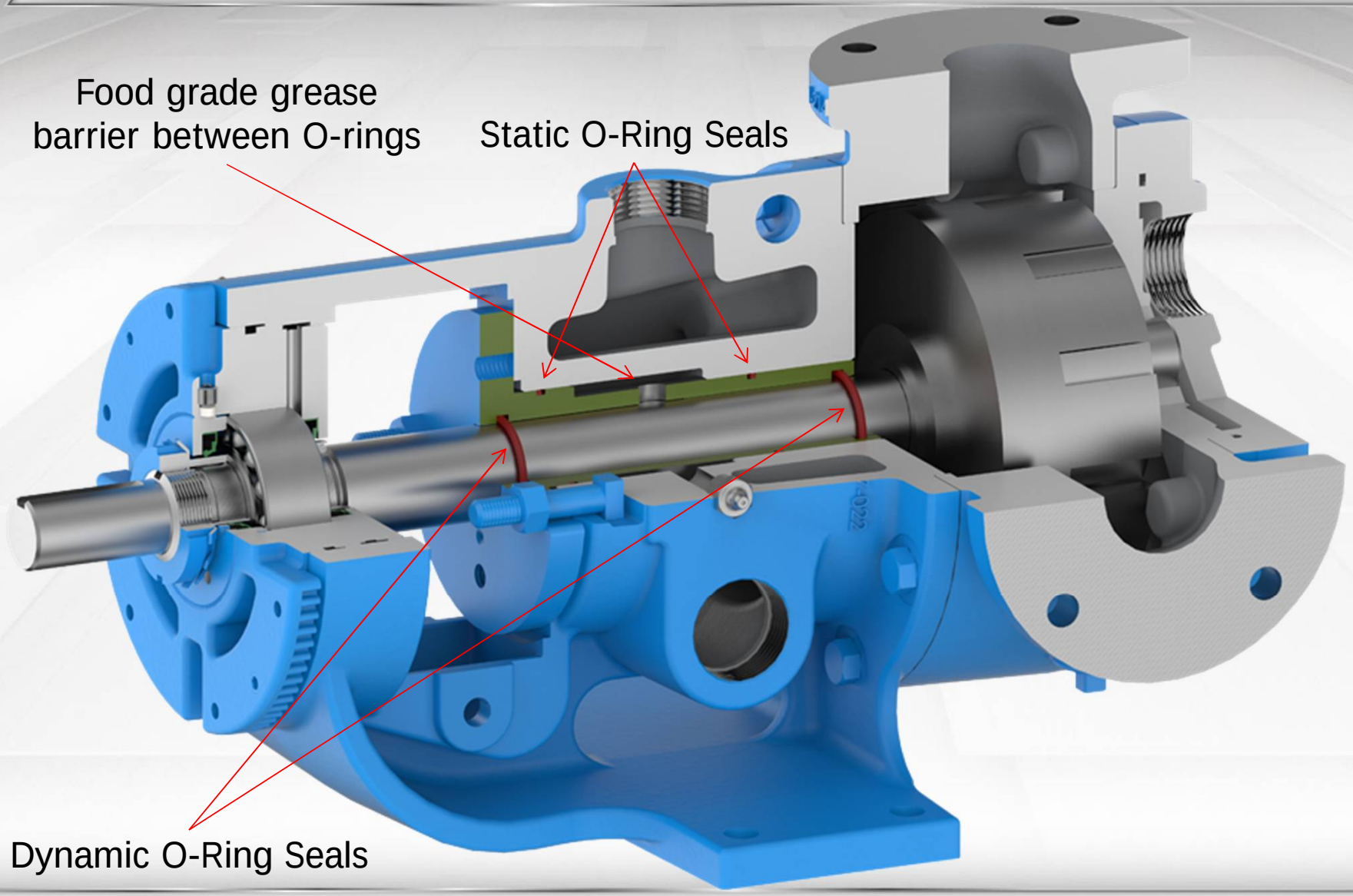

Leakage Prevention

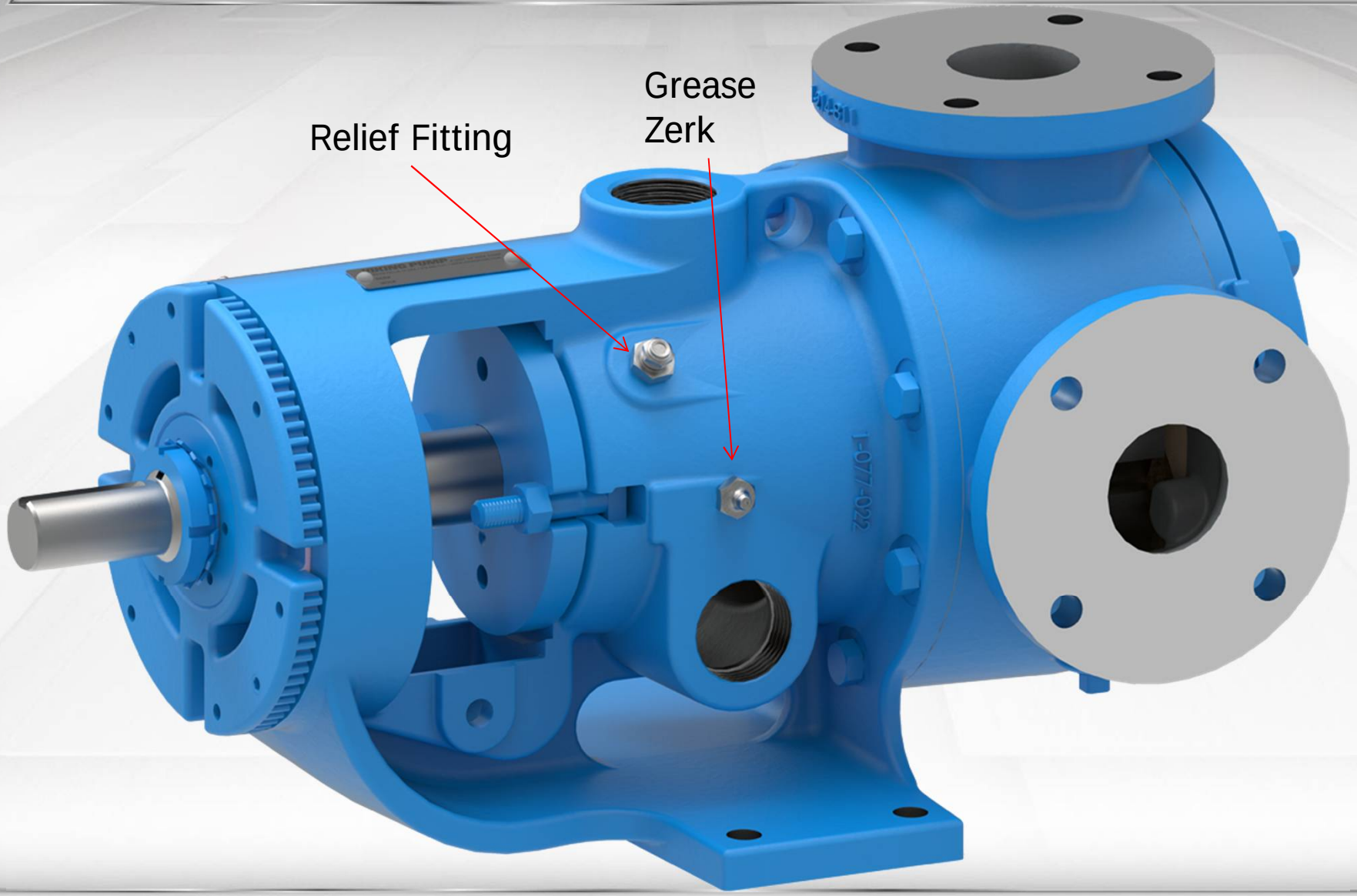

Leakage Prevention

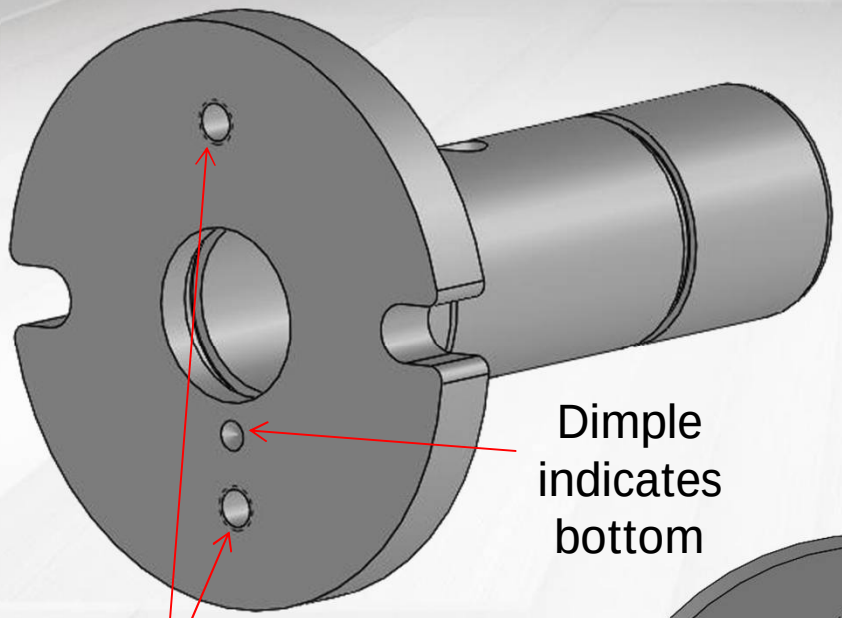

Dimple indicates bottom

Jackscrew taps for easy removal

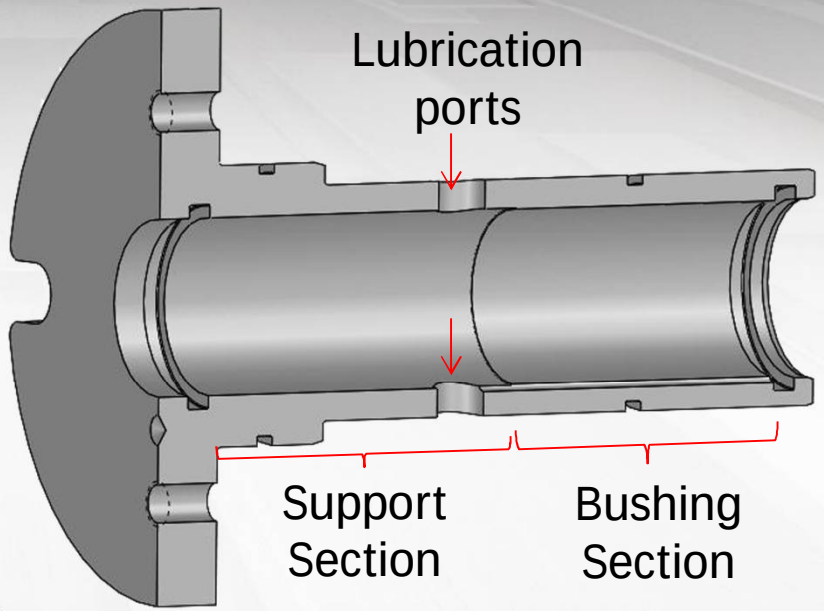

Lubrication ports

Support Section

Bushing Section

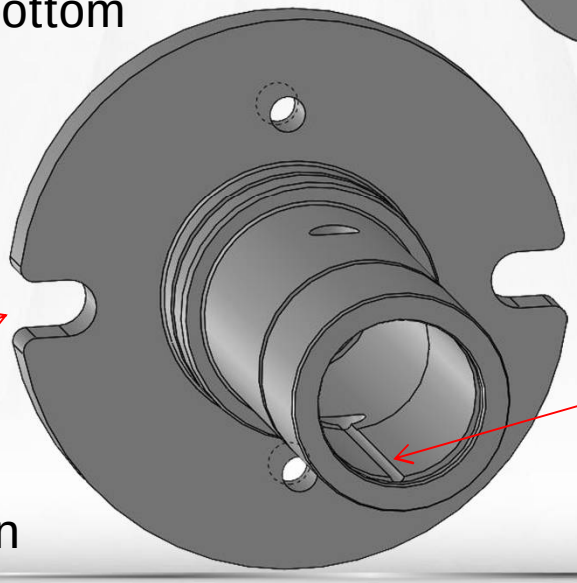

Slots allow rotating for easier installation

Groove at 6:00 lubricates shaft / bushing interface

Leakage Prevention

801 (Garlock Blue-Gard) bracket and head gaskets – Aramid fibers w/SBR binder, for superior sealing

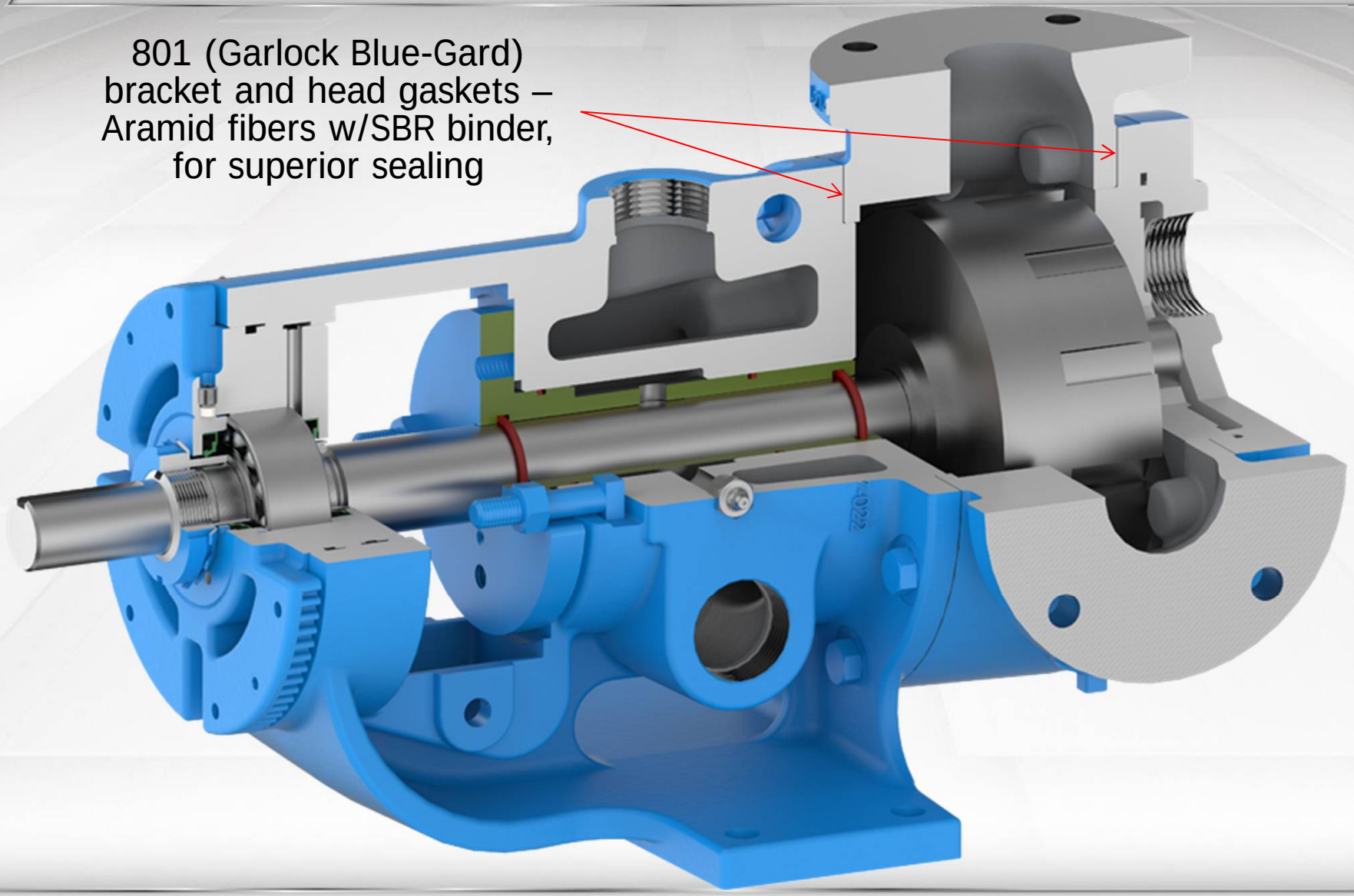

Leakage Prevention

O-Ring Seal

Packed Gland

Reliability

O-Ring Seal Bushing (OSB) keeps chocolate out of bracket to prevent binding

Flush and suckback grooves ensure flow behind rotor to prevent binding

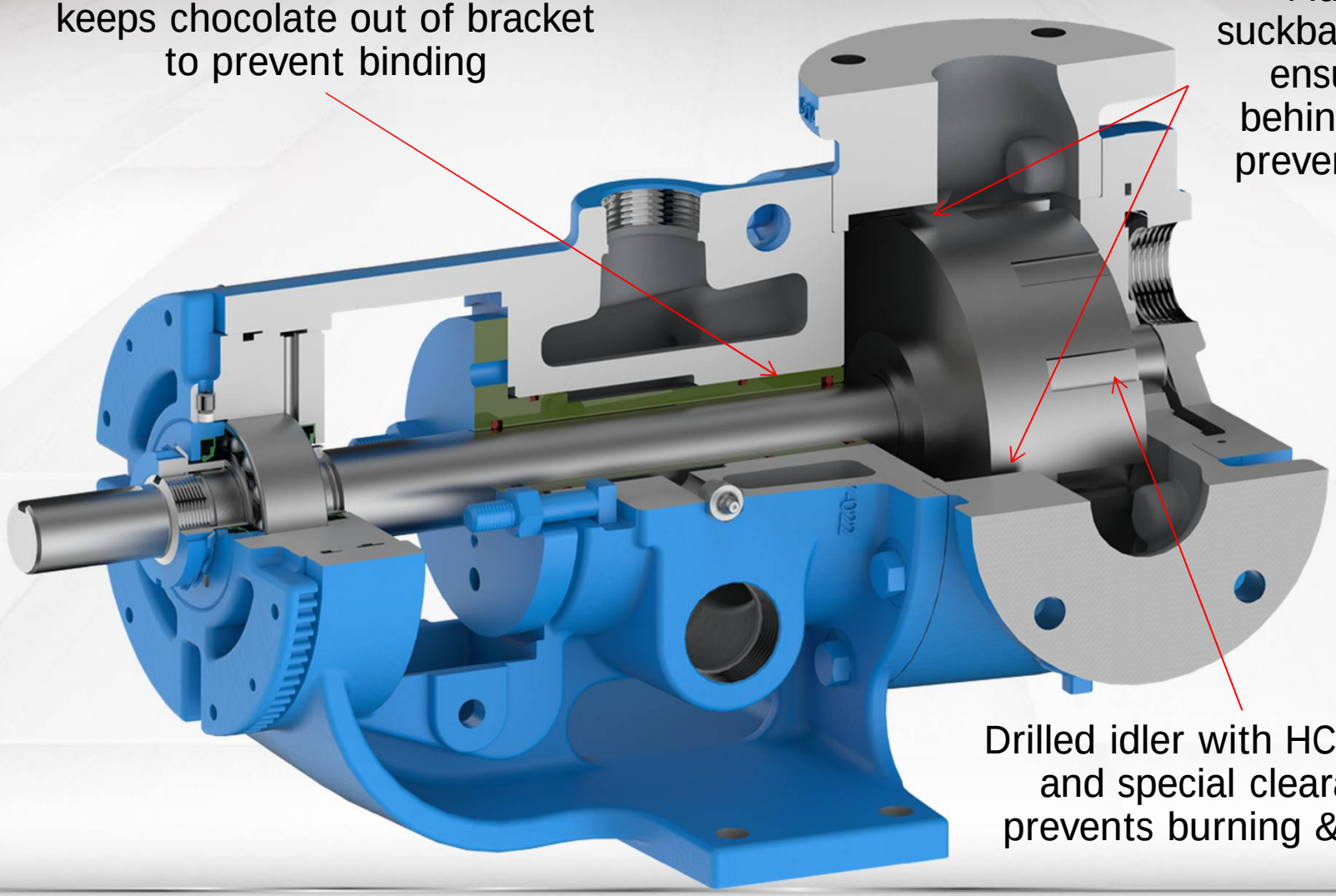

Drilled idler with HCI bushing and special clearances, prevents burning & binding

Commonality

224A-CHC1 W/GROOVES

CHC1 Model for Cocoa Liquor, All Chocolates (≈5,000 to 200,000 cPs)	Ports		
	Size	Type	Loca-tion
H224A-CHC1	1.5”	NPT	90°
H224A-CHC1	2”	Flange	90°
HL224A-CHC1	1.5”	NPT	90°
HL224A-CHC1	2”	Flange	90°
K224A-CHC1	2”	NPT	90°
K224A-CHC1	2”	Flange	90°
K224A-CHC1	3”	Flange	90°
KK224A-CHC1	2”	NPT	90°
KK224A-CHC1	2”	Flange	90°
KK224A-CHC1	3”	Flange	90°
LQ224A-CHC1	3”	Flange	90°
LQ224A-CHC1	4”	Flange	90°
LL224A-CHC1	3”	Flange	90°
LL224A-CHC1	4”	Flange	90°
LS224A-CHC1	3”	Flange	90°
LS224A-CHC1	4”	Flange	90°
Q224A-CHC1	4”	Flange	90°
QS224A-CHC1	6”	Flange	180°

Commonality

224A-CHC1 W/GROOVES

224A-CHC2 W/O GROOVES

CHC1 Model for Cocoa Liquor, All Chocolates (≈5,000 to 200,000 cPs)	Ports			CHC2 Model for Cocoa Butter, Oils, Lecithin (≈1 to 5,000 cPs)
	Size	Type	Loca-tion	
H224A-CHC1	1.5”	NPT	90°	H224A-CHC2
H224A-CHC1	2”	Flange	90°	H224A-CHC2
HL224A-CHC1	1.5”	NPT	90°	HL224A-CHC2
HL224A-CHC1	2”	Flange	90°	HL224A-CHC2
K224A-CHC1	2”	NPT	90°	K224A-CHC2
K224A-CHC1	2”	Flange	90°	K224A-CHC2
K224A-CHC1	3”	Flange	90°	K224A-CHC2
KK224A-CHC1	2”	NPT	90°	KK224A-CHC2
KK224A-CHC1	2”	Flange	90°	KK224A-CHC2
KK224A-CHC1	3”	Flange	90°	KK224A-CHC2
LQ224A-CHC1	3”	Flange	90°	LQ224-CHC2
LQ224A-CHC1	4”	Flange	90°	LQ224-CHC2
LL224A-CHC1	3”	Flange	90°	LL224A-CHC2
LL224A-CHC1	4”	Flange	90°	LL224A-CHC2
LS224A-CHC1	3”	Flange	90°	LS224A-CHC2
LS224A-CHC1	4”	Flange	90°	LS224A-CHC2
Q224A-CHC1	4”	Flange	90°	Q224A-CHC2
QS224A-CHC1	6”	Flange	180°	QS224A-CHC2

Safety

- EC 1935 is an EU standard that limits leaching of harmful materials from equipment into food.
- All wetted materials have been tested for leachability of harmful substances, all are food-safe
- EC 1935 Compliance standard, with logo visible on pump, documentation in TSM

But, 224A-CHC pumps are not “sanitary” or “hygienic”

Standard Features & Benefits

- **Steel rotors** (Ductile Iron on KK, LS & QS) **-** ensures gear tooth strength to handle high viscosities
- **Hardened steel shafts** – minimizes wear by O-rings handling abrasive chocolates and liquor
- **Hardened Iron Bushings, Hardened Steel Idler Pins** – ensure long life on abrasive chocolates
- **Less valve –** Integral pressure relief valves not recommended for chocolate due to binding
- **Reversible Flow –** For application flexibility

Standard Features & Benefits

- **Rotatable Casing –** Allows same pump to be used in right or left-hand configurations

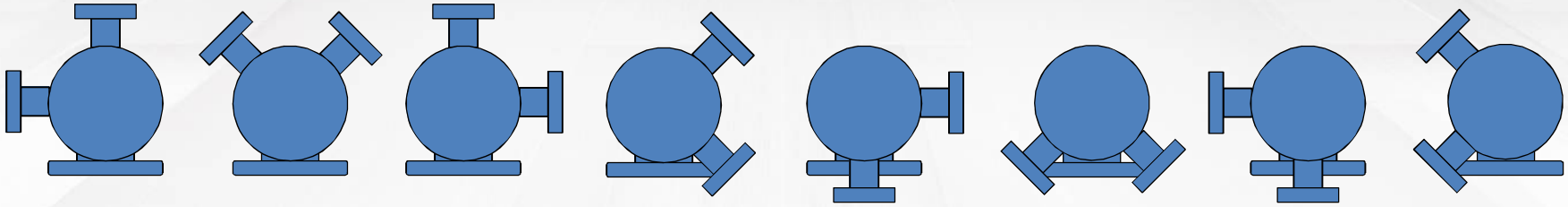

- Allows in-line porting with two 45° elbows.

Standard Features and Benefits

- **Jacketed bracket and head** – ensures chocolate is liquid at startup. Even if not used (e.g. in a hot room), these allow pump standardization throughout plant
- O-Ring Seals are **retrofittable** onto existing 124A and 224A series pumps (except Q & QS, which require a bracket modification or new bracket)
- Makes **change easier** for users with many existing Viking pumps

Parts Kits

- **Seal kits** - enable conversion of existing 124A / 224A pumps to O-ring seal design. Includes OSB, O-Rings, head and bracket gaskets, grease and relief fittings, seal sleeve, gland nuts and bearing replacement parts.

- **O-Ring kits** – include two sets of O-rings, one head gasket, jackscrews and a seal sleeve on H-LL

- **Rebuild kits** – Includes head and pin, drilled idler with HCI bushing and special clearances, and head capscrews

Operation & Maintenance

- O-Rings **replaceable** with pump in-place – offering ease of maintenance, but requires either spacer couplings or pulling the head and rotor/shaft

- **Temperatures** are limited to 225°F / 107°C to ensure O-Ring resilience. **Speeds** are limited to maximize life.

- Suckback and flush grooves on 224A-CHC1 pumps increase **reliability**, but also increase slip. CHC1 performance data takes this added slip into account.

- Regular re-greasing of the bracket is required. Every 2-3 weeks is suggested, or use a pressurized grease pot.

Viking's CHC Series

- **Leakage Prevention**
  - Double O-ring Seal w/barrier, better gaskets
- **Reliability**
  - No place for chocolate to bind up
- **Commonality**
  - Pumps and parts, regardless of liquid
- **Safety**
  - Food grade materials, EC1935 compliance

OFFICIAL UK DISTRIBUTOR:

Michael Smith Engineers Limited

Web: www.michael-smith-engineers.co.uk

Email: info@michael-smith-engineers.co.uk

Freephone: 0800 316 7891