CODIP	RUBBER TUBULAR DIAPHRAGM PUMP TYPE RP-20 ASSEMBLY	DWG. N. 0201/R DATE 11/11/97	REV. ~~0~~ ~~1~~ 2 3 4

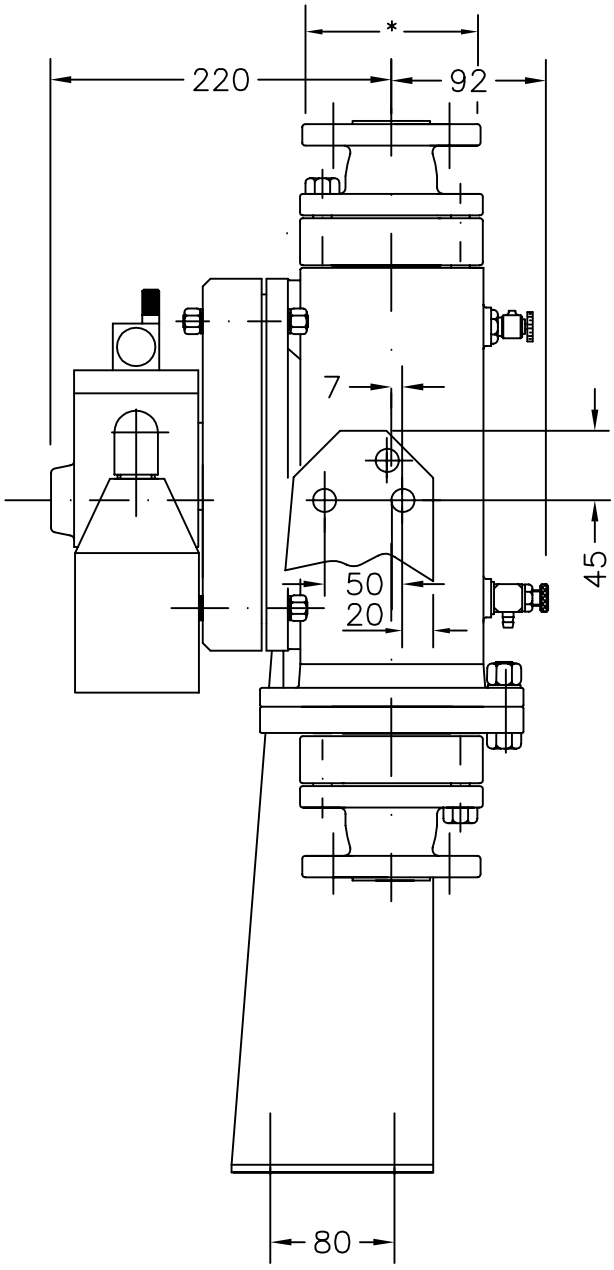

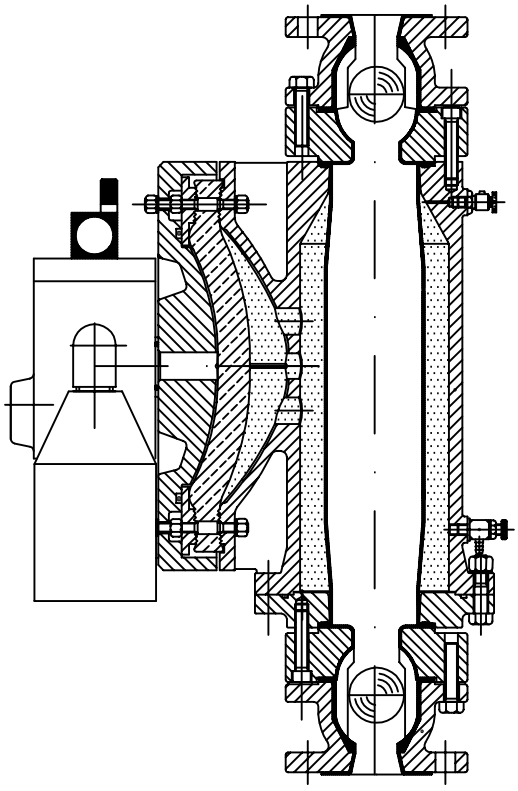

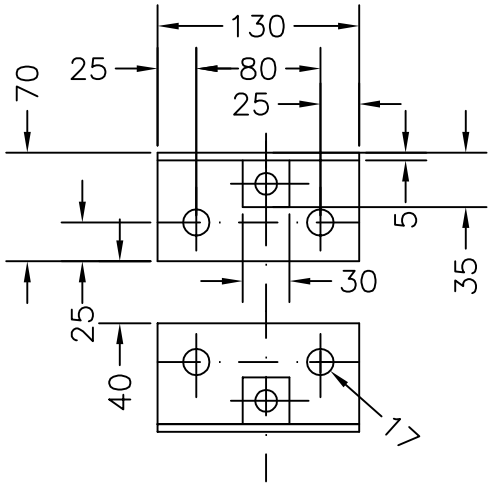

SCALA 1 : 5

* = Ø 108 ANSI flanged (DN 1")
Ø 115 UNI flanged (DN 25)

0201_20R

CODIP 21050 BUSTO ARSIZIO (ITALY) – P.O.B. 122 – VIALE CADORNA 8
TELEPHONE (0331) 679.186 – TELEFAX : 678.341

OFFICIAL UK DISTRIBUTORS: Michael Smith Engineers Ltd Website: www.michael-smith-engineers.co.uk Freephone: 0800 316 7891