ATTACHED II	AIR-OPERATED TUBULAR DIAPHRAGM PUMP	RP 20 PTFE
		DIMENSIONAL DRAWING NO. 0202/DT

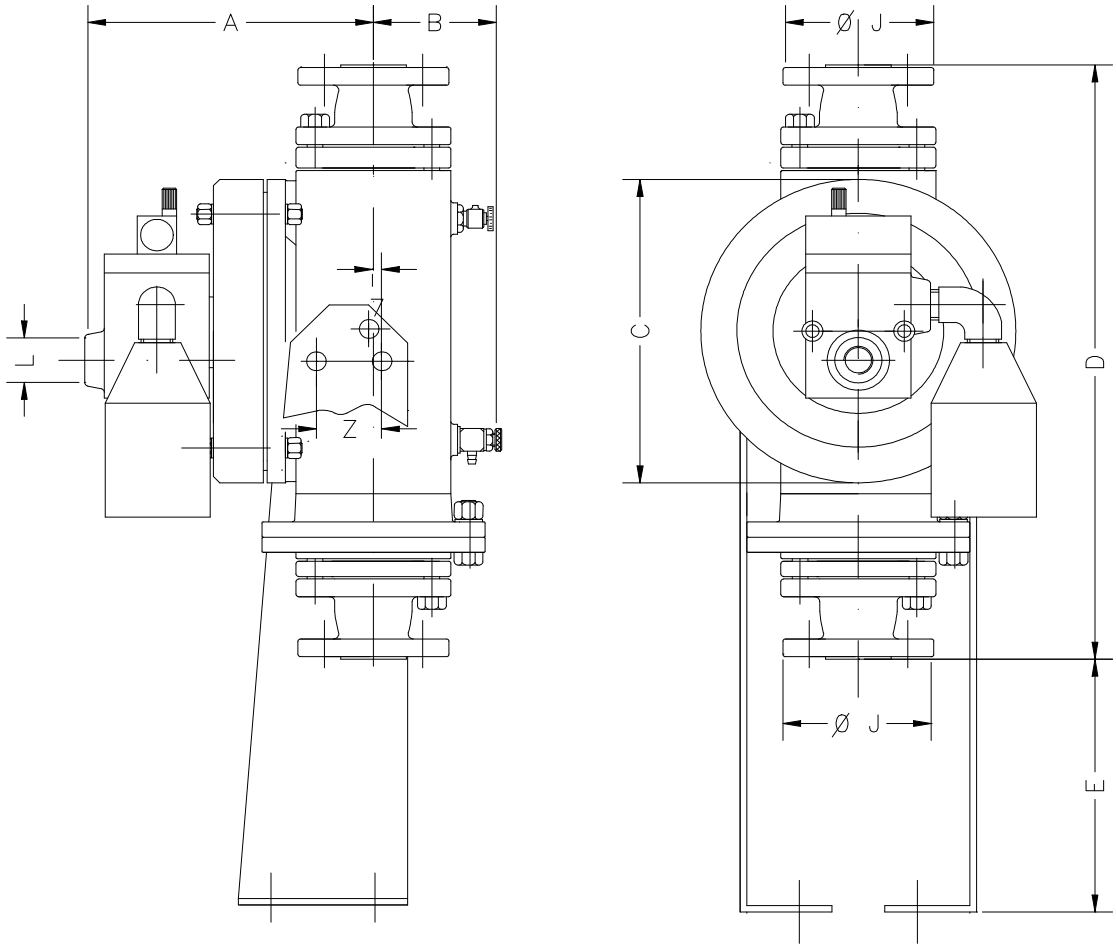

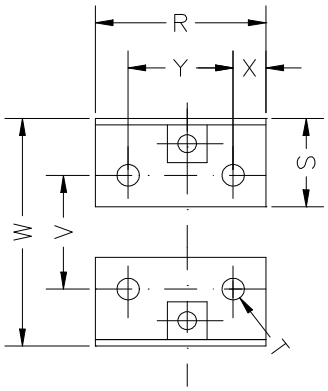

SCALA 1 : 5

A	B	C	D	E	Ø J	Ø L	R	S	Ø T	V	W	X	Y	Z
220	92	240	470	200	108 (ANSI) 115 (UNI)	½" GAS	130	70	17	125	212	25	80	50

CODIP - BUSTO ARSIZIO TECHNICAL DEPT. TEL. 0331 679186	Date 01/09/2003	Appr.
	Date rel.	Appr.
	Date rel.	Appr.
Dwg. 0202/DT Rev. 2	Date rel.	Appr.
	Date rel.	Appr.

OFFICIAL UK DISTRIBUTOR:
Michael Smith Engineers Limited Website: www.micheal-smith-engineers.co.uk Freephone: 0800 316 7891