CODIP	RUBBER TUBULAR DIAPHRAGM PUMP TYPE RP-60 ASSEMBLY	DWG. N. 0601/R DATE 18/02/03	REV. Ø 1 2 3 4

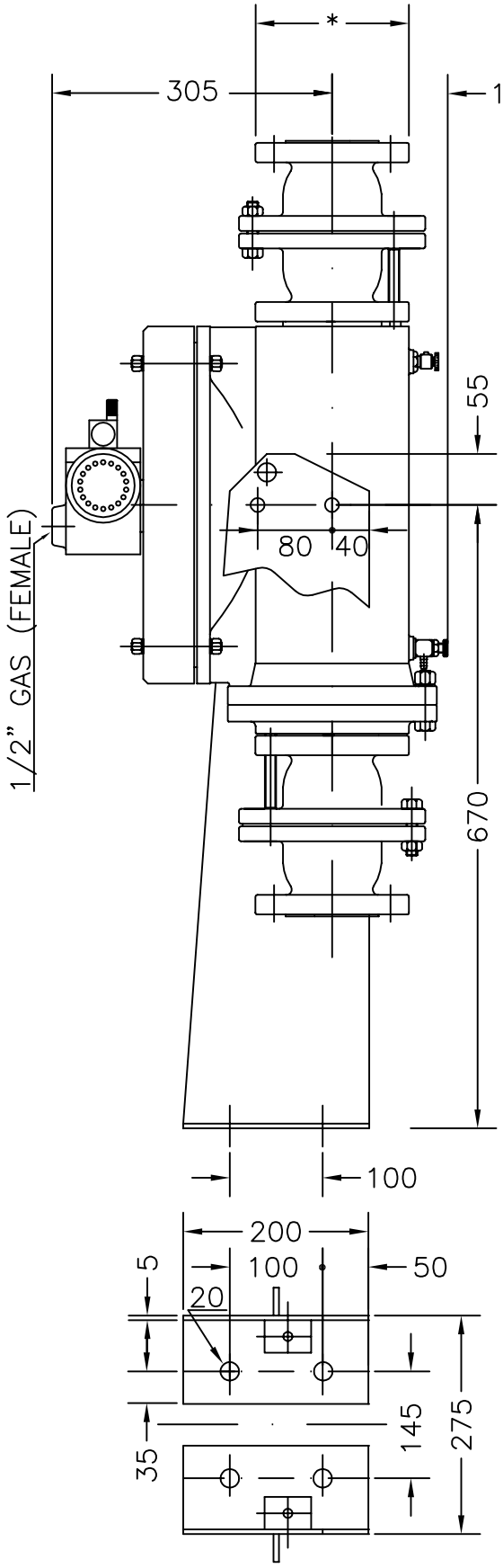

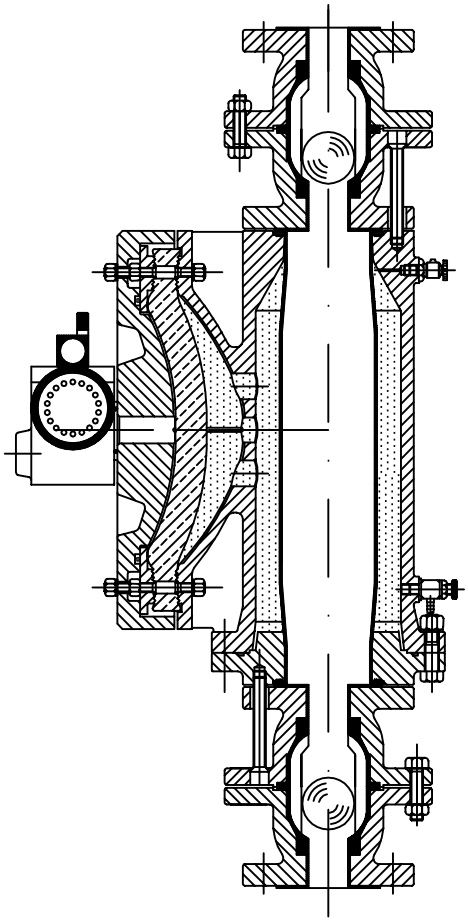

SCALA 1 : 75

* = Ø 152 ANSI flanged (DN 2")
Ø 165 UNI flanged (DN 50)

CODIP 21050 BUSTO ARSIZIO (ITALY) – P.O.B. 122 – VIALE CADORNA 8
TELEPHONE (0331) 679.186 – TELEFAX : 678.341

0601R

OFFICIAL UK DISTRIBUTOR: Michael Smith Engineers Limited Website: www.michael-smith-engineers.co.uk Freephone: 0800 316 7891