MSDB SERIES
MODEL MSDB3

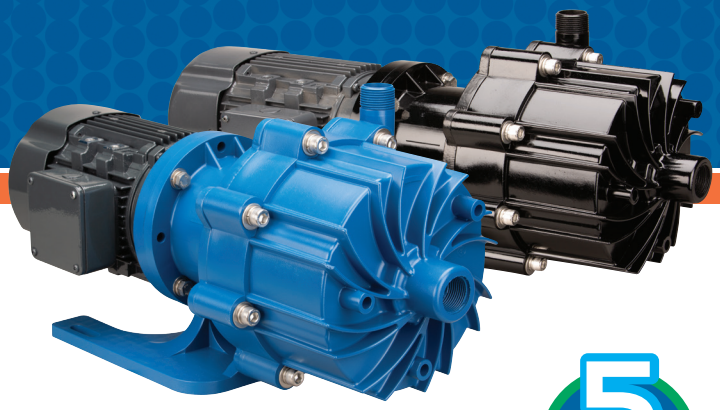

5 YEAR WARRANTY

MSDB3 PERFORMANCE 3500 RPM

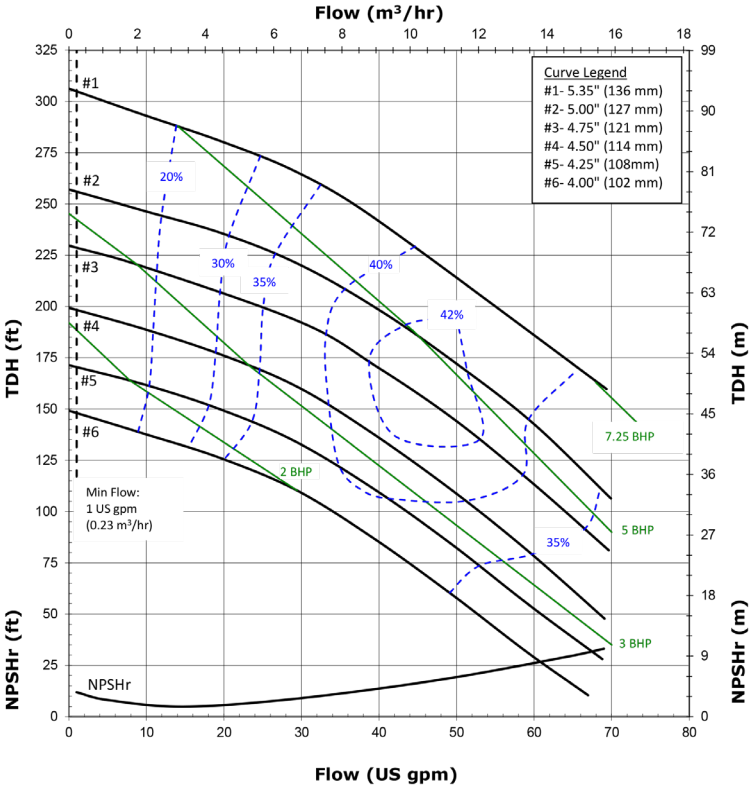

MSDB3 PERFORMANCE 2900 RPM

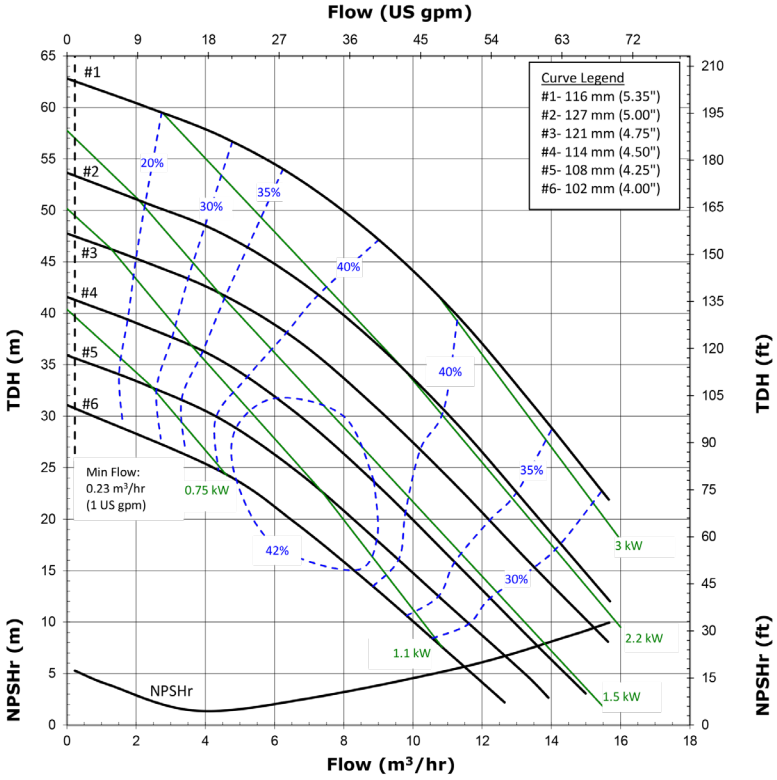

FEATURES & CAPABILITIES

- + *Three stage magnetic drive centrifugal pump*
- + *Five-year warranty*
- + *Extended run dry ability (with carbon bushing)*
- + *Easy set, measurement-free drive*
- + *Polypropylene/Ryton (PPS) or PVDF/Ryton (PPS) construction*
- + *Powerful neodymium magnets*
- + *Close-coupled design*
- + *1" Threaded (NPT or BSP), or flange connections*
- + *Vertical installation with IEC motor*
- + *Back pullout design*
- + *Mounts to NEMA and IEC motor frames*
- + *ISO 1940 G2.5 balancing*
- + *CE certified/ATEX available*
- + *Working pressure up to 135 PSI (9.3 bar)*
- + *Specific gravity over 1.8*
- + *Viscosity up to 150 cP*
- + *Polypropylene/Ryton (PPS) – 180º F (82º C)*
- + *PVDF/Ryton (PPS) – 220º F (104º C)*

APPLICATIONS

- + *Chemical processing*
- + *Plating*
- + *Water and wastewater*
- + *Electronics*
- + *Pharmaceuticals*
- + *Wet scrubber*
- + *Spray applications*
- + *Filtration*

MSDB SERIES

Specifications

Description		Polypropylene	PVDF
1	MSDB Housing	Glass-fiber reinforced polypropylene (GF PP)	Carbon-fiber reinforced PVDF (CF PVDF)
1A	Housing Thrust Ring	High purity alumina ceramic or silicon carbide (SiC)	
1B	Housing Shaft	High purity alumina ceramic or silicon carbide (SiC)	
2	Housing O-ring	FKM, EPDM, Simriz®, or Kalrez	
3	Impeller Bushing	Carbon, glass-filled PTFE, or SiC	
4	Impellers	Ryton® R-4	
4A	Impeller Thrust Ring	GF molybdenum disulfide filled PTFE or SiC	
5	Pump Shaft	Ryton® R-4	
6	Diffuser	Ryton® R-4	
7	Middle Housing	Ryton® R-4	
8	Inner Volute	Ryton® R-4	
9	Barrier	GF PP	CF PVDF
9A	Barrier Thrust Ring	High purity alumina ceramic	
9B	Barrier Shaft	High purity alumina ceramic or SiC	
10	Motor Adapter	GF PP	
11	Outer Drive Hub	Nickel-plated neodymium iron boron magnets/steel	
12	Impeller Drive	Epoxy-coated neodynium iron boron magnets encapsulated in:	
		unfilled polypropylene	unfilled PVDF
13	Impeller Drive Bushing	Carbon, glass-filled PTFE, SiC	
14	Vapor Protection O-rings	Buna N	

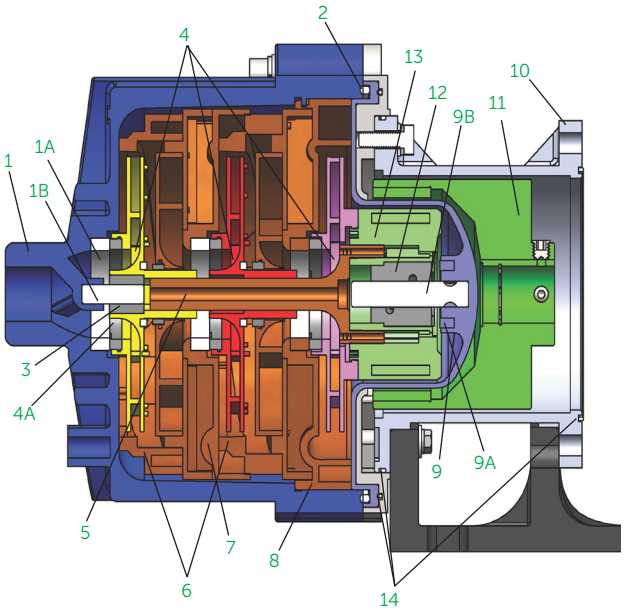

Kalrez® is a registered trademark of DuPont Performance Elastomers
Simriz® Perfluoroelastomer is a registered trademark of the Simrit® division of Freudenberg-NOK
Hastelloy® C is a registered trademark of Haynes International, Inc.
Ryton® is a registered trademark of Solvay SA

Dimensions

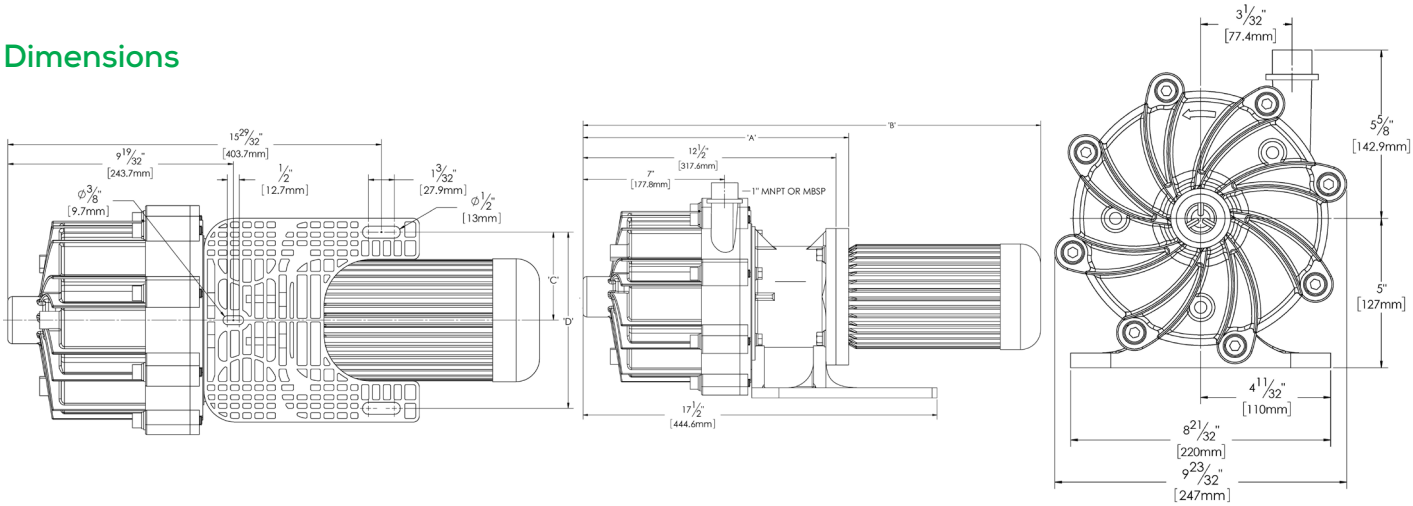

Motor Frame	A	B†	C	D	lbs. [kg] PP	lbs. [kg] PVDF
NEMA 56C FR.	12-1/2" [31.75 cm]	23-11/16" [60.17 cm]	3-3/4" [9.5 cm]	7-1/2" [19.1 cm]	30 [13.6]	33 [15]
NEMA 143/5 TC FR.	12-1/2" [31.75 cm]	23-21/32" [60.09 cm]	3-3/4" [9.5 cm]	7-1/2" [19.1 cm]	30 [13.6]	33 [15]
NEMA 182/4TC FR.	13-3/8" [33.97 cm]	27-9/32" [69.29 cm]	3-3/4" [9.5 cm]	7-1/2" [19.1 cm]	30 [13.6]	33 [15]
IEC 80 FR. B5/B14	13-1/8" [33.34 cm]	23-3/16" [58.9 cm]	3-3/4" [9.5 cm]	7-1/2" [19.1 cm]	30 [13.6]	33 [15]
IEC 90 FR. B5/14	13-1/8" [33.34 cm]	23-3/8" [59.4 cm]	3-3/4" [9.5 cm]	7-1/2" [19.1 cm]	30 [13.6]	33 [15]
IEC 100 FR. B5/B14	13-3/16" [33.5 cm]	24-7/8" [63.2 cm]	3-5/32" [8.0 cm]	6-10/32" [16.0 cm]	30 [13.6]	33 [15]
IEC 112 FR. B5/B14	13-3/16" [33.5 cm]	25-3/8" [64.5 cm]	3-3/4" [9.5 cm]	7-1/2" [19.1 cm]	30 [13.6]	33 [15]

Note: Contact factory for dimensions on flanged models. *For B5 weight, add 3 lbs. to 80/90 B14 frame weight and 6 lbs. to 100/112 B14 frame weight.
†Varies with motor manufacturer.

finishthompson.com

FINISH THOMPSON INC. - HEADQUARTERS
921 Greengarden Road | Erie, PA 16501
800.934.9384 | ph 814.455.4478 | fx 814.455.8518
email fti@finishthompson.com

FINISH THOMPSON INC. - EUROPE CENTER
Otto-Hahn-Strasse 16 | Maintal, D-63477 Germany
49 (0)6181-90878-0 | fx 49 (0)6181-90878-18
email fti@finishthompson.com

OFFICIAL UK DISTRIBUTOR: Michael Smith Engineers Limited Web: www.michael-smith-engineers.co.uk Freephone: 0800 316 7891