MSKC SERIES
MODEL MSKC

Features

- Sealless mag drive technology - eliminates costly seal problems
- Multi-Stage design: Generates increased head at low flow rates, low power consumption, wide hydraulic envelope allows for mix and match impeller sizes
- Small footprint - avoids large impeller diameters
- Unique interconnecting drive shaft - transmits torque from magnetic coupling to first stage impeller
- Independent thrust bearings at each stage for maximum reliability
- Polypropylene or PVDF construction
- Accepts standard NEMA 56C or IEC 71/B14, 80/B14 frame motors
- Maximum working pressure 80 psi
- Maximum temperature: 180˚F (82˚C) - Polypropylene
  220˚F (104˚C) - PVDF
- Maximum flow 60 gpm (12.8 m^3/hr.), maximum head 100 ft. (21.3 m)

Multi-Stage is also available in a vertical design.

Typical Applications

- High pressure/low flow applications for chemical processing, spraying, bulk unload, tank transfer
- Plating recirculation/filtration, PCB etching/rinse
- Water/waste water treatment, wet scrubber
- Laboratory, pharmaceutical, photo processing

60 Hz, 3450 rpm

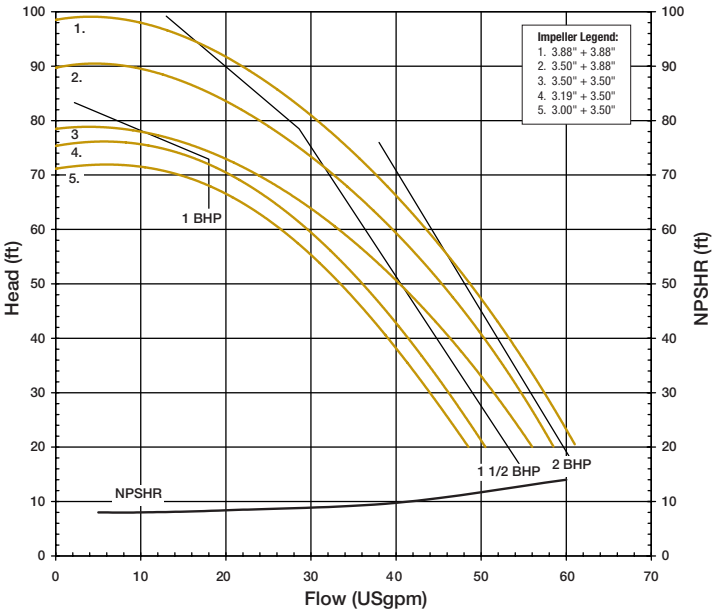

50 Hz 2900 rpm

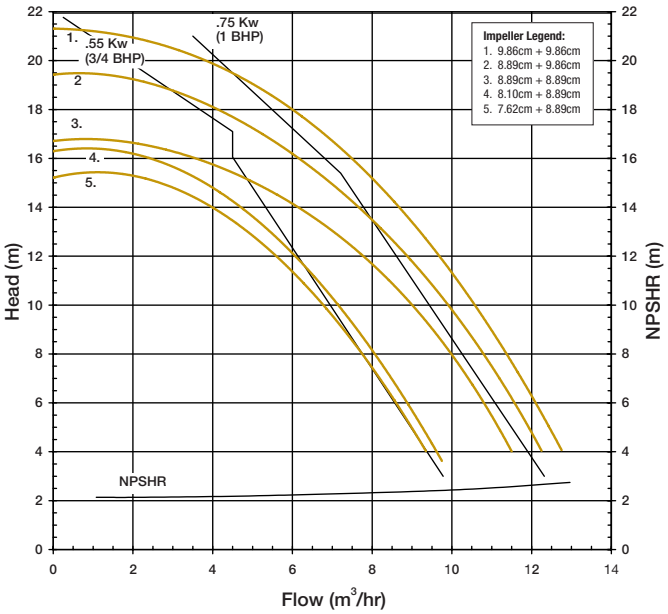

Note: numbers 1, 2, 3, 4 , 5 on curves indicate impeller diameter combinations. See specifications

MSKC SERIES

Specifications

Model	Suction x Discharge	Impeller Size		Maximum Flow		Maximum Head		Motor Drive		Max. S.G. @ 50 cP
	inch	inch	cm	3450 rpm gpm	2900 rpm m^3/h	3450 rpm ft	2900 rpm m	3450 rpm hp	2900 rpm kW	
MSKC	1-1/2" FNPT/BSP x 1" MNPT/BSP	3.88+3.88	9.86+9.86	61	12.7	99	21.3	3	1.1	1.5
		3.50+3.88	8.89+9.86	59	12.2	90	19.4	2	1.1	1.5
		3.50+3.50	8.89+8.89	56	11.5	79	16.7	2	0.75	1.5
		3.19+3.50	8.10+8.89	51	9.7	75	16.2	1.5	0.75	1.8
		3.00+3.50	7.62+8.89	49	9.3	71	15.2	1.5	0.55	1.8

Note: Actual performance may vary with conditions.

Dimensions

Model	Motor Frame	A*		B*		C		D	
		in	cm	in	cm	in	cm	in	cm
MSKC	56C	6-1/2	16.5	8	20.3	3-1/2	8.9	10-9/32	26.11
	71 IEC	4-1/8	10.5	8	20.3	2-13/16	7.1	10-9/32	26.11
	80 IEC	4-23/32	12	9	22.9	3-5/32	7.0	10-9/32	26.11

*Varies with motor manufacturer.

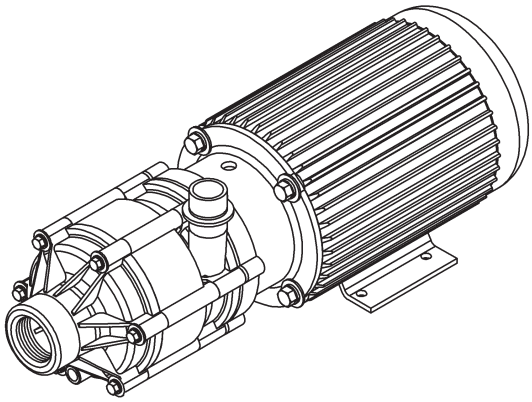

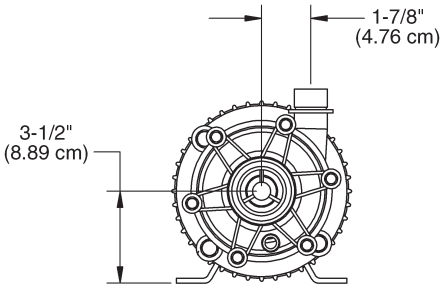

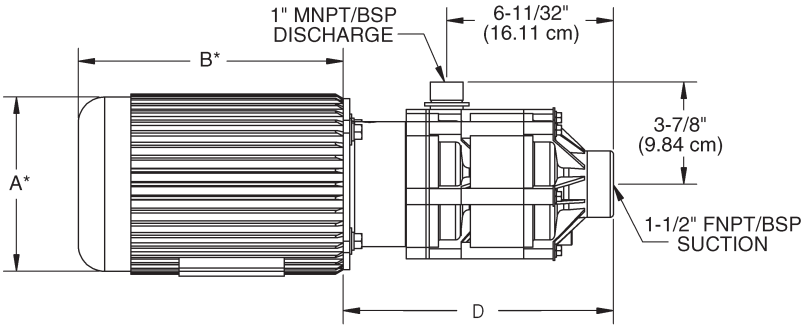

finishthompson.com

FINISH THOMPSON INC. - HEADQUARTERS
921 Greengarden Road | Erie, PA 16501
800.934.9384 | ph 814.455.4478 | fx 814.455.8518
email fti@finishthompson.com

FINISH THOMPSON INC. - EUROPE CENTER
Otto-Hahn-Strasse 16 | Maintal, D-63477 Germany
49 (0)6181-90878-0 | fx 49 (0)6181-90878-18
email fti@finishthompson.com

OFFICIAL UK DISTRIBUTOR:
Michael Smith Engineers Limited **Website: www.michael-smith-engineers.co.uk** **Freephone: 0800 316 7891**