SP SERIES
MODEL SP10

5 YEAR WARRANTY

SP10 PERFORMANCE Flooded Suction 3450 RPM*

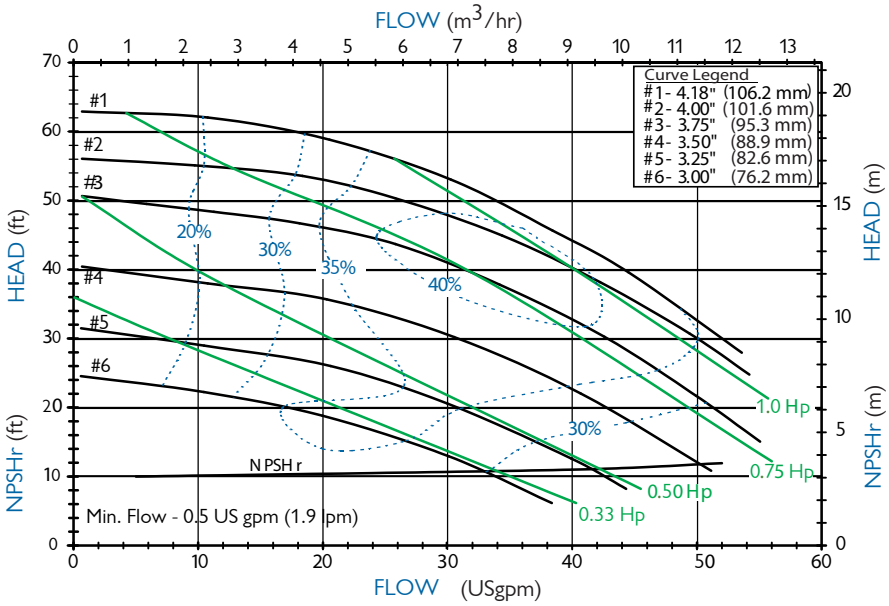

SP10 PERFORMANCE Flooded Suction 2900 RPM*

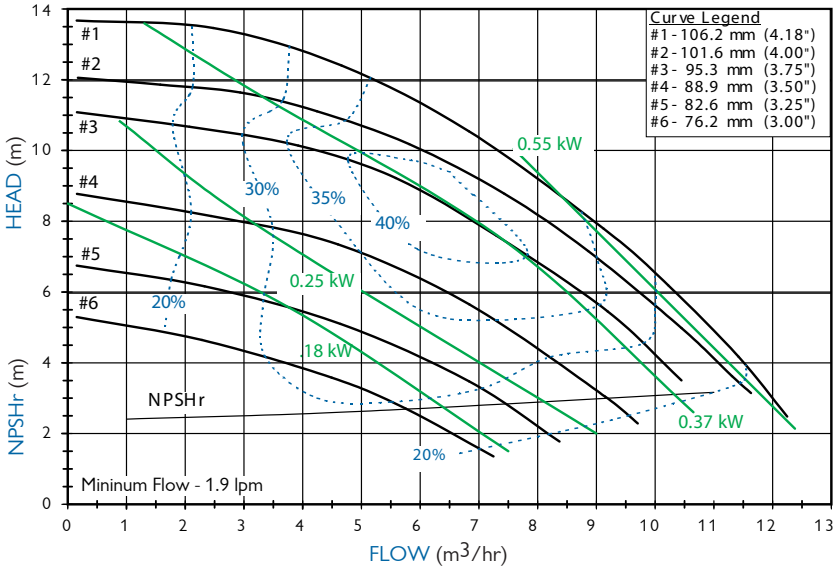

Notes: Performance curves above are based on flooded suction.

*Performance will vary with suction lift conditions. For performance at various suction lifts, see curve book on FTI web site (www.finishthompson.com) or contact factory.

Warning! SP Series not recommended for pumping flammables!

FEATURES & CAPABILITIES

- *Self-priming, magnetic drive*
- *Five-year warranty*
- *Provides up to 25 ft. (7.6 m) lift or equivalent*
- *Primes 15 ft. (4.57 m) in 90 seconds with maximum diameter impeller*
- *Retains fluid for re-priming when shut off without a check valve*
- *Extended run dry ability (with carbon bushing)*
- *High operating efficiency*
- *Polypropylene or PVDF construction*
- *Powerful neodymium magnets*
- *Close-coupled design*
- *Threaded (NPT or BSP), union, or flange connections*
- *Back pullout design*
- *Mounts to NEMA and IEC (B5 & B14) motor frames*
- *Easy set measurement free drive*
- *ISO 1940 G2.5 balancing*
- *CE certified*
- *High working pressure up to 80 psi (5.5 bar)*
- *Specific gravity over 1.8*
- *Polypropylene—180° F (82° C)*
- *PVDF—220° F (104° C)*

APPLICATIONS

- *Rail cars*
- *Tanker trucks*
- *Tanks with an opening on top*
- *Bulk storage to day or process tank transfer*
- *Sumps and reservoirs*
- *Below grade storage tanks*
- *Over-the-wall applications*
- *When run-dry protection is needed*
- *and many more!*

SP SERIES

Specifications

Description	Polypropylene	PVDF
1 Housing 4 Separator plate 6 Inner volute 7 Impeller	Glass-fiber reinforced polypropylene (GF PP)	Carbon-fiber reinforced PVDF (CF PVDF)
3A, 5, 10 O-ring options	FKM, EPDM	
3 Fill and drain plugs*	Polypropylene	PVDF
6A Inner volute thrust ring	High purity alumina ceramic, or silicon carbide (SiC)	
7A Impeller thrust ring	GF molybdenum disulfide filled PTFE or SiC	
8 Inner drive	Neodymium iron boron magnets encapsulated in unfilled polypropylene	Neodymium iron boron magnets encapsulated in unfilled PVDF
8A Bushing	Carbon, PTFE, high purity alumina ceramic, or SiC	
9 Shaft	High purity alumina ceramic, Hastelloy® C, or SiC	
11 Barrier	GF PP	CF PVDF
11A Barrier thrust ring	Silicon carbide	
12 Motor adapter	Ductile iron	
13 Outer drive magnets	Nickel-plated neodymium iron boron magnets/ steel	
14 NEMA motor adapter sealing kit	Buna N, FKM, or EPDM	
15 Clamp ring	Carbon steel	

*Fill plug not shown

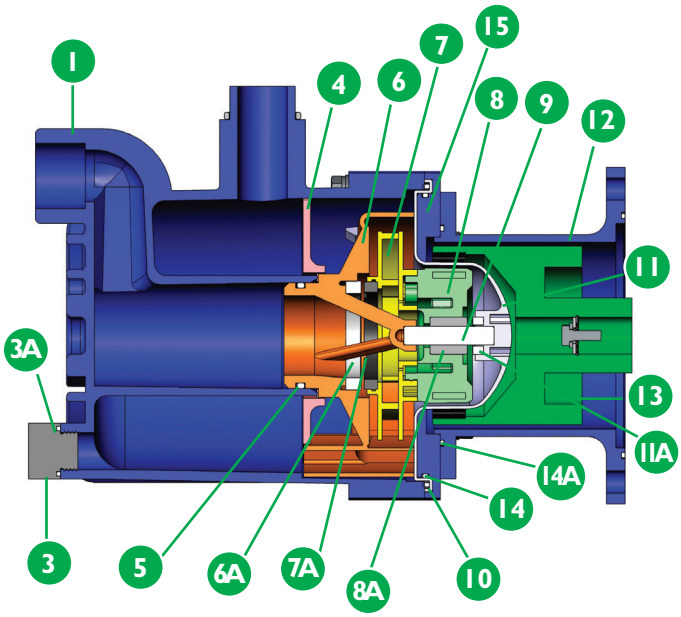

Hastelloy® C is a registered trademark of Haynes International, Inc.

Dimensions

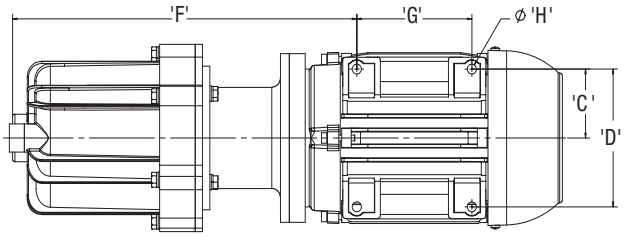

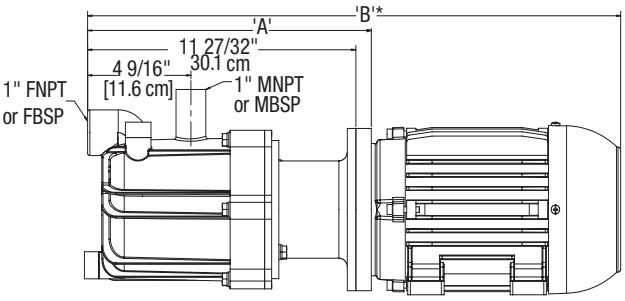

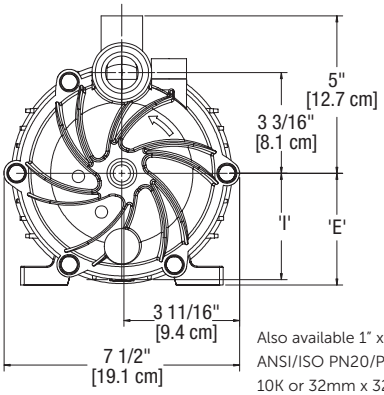

Also available 1" x 1" 150 lb. ANSI/ISO PN20/PN40/JIS 10K or 32mm x 32mm union connection. Flanges are in compliance with bolting dimensions only.

Frame Size	A	B*	C	D	E
NEMA 56C	11-27/32" (30.1 cm)	22-3/32" (56.1 cm)	2-7/16" (6.2 cm)	4-7/8" (12.4 cm)	3-1/2" (8.9 cm)
NEMA 145TC	11-27/32" (30.1 cm)	23-1/16" (58.6 cm)	2-3/4" (7.0 cm)	5-1/2" (14.0 cm)	3-1/2" (8.9 cm)
IEC63 B14/B5	12-3/16" (31.0 cm)	18-31/32" (48.2 cm)	1-31/32" (5.0 cm)	3-15/16" (10.0 cm)	2-15/32" (6.3 cm)
IEC71 B14/B5	12-3/16" (31.0 cm)	20-1/2" (52.0 cm)	2-7/32" (5.6 cm)	4-13/32" (11.2 cm)	2-25/32" (7.1 cm)
IEC80 B14/B5	12-17/32" (31.8 cm)	21-3/4" (55.2 cm)	2-15/32" (6.3 cm)	4-29/32" (12.5 cm)	3-5/32" (8.0 cm)
IEC90 B14/B5	12-17/32" (31.8 cm)	23-17/32" (59.8 cm)	2-3/4" (7.0 cm)	5-1/2" (14.0 cm)	3-17/32" (9.0 cm)

Frame Size	F	G	H	I	Pump Wt. - lbs (kg)	Motor Wt.** - lbs. (kg)
NEMA 56C	14-19/32" (37.1 cm)	3" (7.6 cm)	11/32" (0.9 cm)	3-3/8" (8.6 cm)	13 (5.9)	28 (12.7)
NEMA 145TC	14-7/32" (36.1 cm)	5" (12.7 cm)	11/32" (0.9 cm)	3-3/8" (8.6 cm)	13 (5.9)	32 (14.5)
IEC63 B14/B5	13-5/16" (33.8 cm)	3-5/32" (8.0 cm)	9/32" (0.7 cm)	3-3/8" (8.6 cm)	16.5 (7.5)	17 (7.7)
IEC71 B14/B5	14-1/16" (35.7 cm)	3-17/32" (9.0 cm)	9/32" (0.7 cm)	3-3/8" (8.6 cm)	16.5 (7.5)	22 (10.0)
IEC80 B14/B5	14-7/16" (36.7 cm)	3-15/16" (10.0 cm)	13/32" (1.0 cm)	3-15/16" (10.0 cm)	19 (8.6)	37.5 (17.0)
IEC90 B14/B5	14-23/32" (37.4 cm)	3-15/16" (10.0 cm)	13/32" (1.0 cm)	3-15/16" (10.0 cm)	19 (8.6)	37.5 (17.0)

Dimensions and weights are for reference only.

*Varies with motor manufacturer. **Depends upon motor manufacturer and style of motor chosen.

finishthompson.com

FINISH THOMPSON INC. - UNITED STATES
921 Greengarden Road | Erie, PA 16501
800.934.9384 | ph 814.455.4478 | fx 814.455.8518
email fti@finishthompson.com

FINISH THOMPSON INC. - GERMANY
Otto-Hahn-Strasse 16 | Maintal, D-63477 Germany
49 (0)6181-90878-0 | fx 49 (0)6181-90878-18
email fti@finishthompson.com

OFFICIAL UK DISTRIBUTOR:
Michael Smith Engineers Limited **Website: www.michael-smith-engineers.co.uk** **Freephone: 0800 316 7891**