VKC SERIES
MODELS VKC5.5-10

The VKC Series

Using rare-earth Neodymium magnets, VKC Series pumps achieve a truly sealless, vertical pump design free of wetted shaft bearings. A completely sealed, air tight column and the absence of a secondary/back impeller prevent aeration (virtually eliminating micro-bubbles) and the release of fugitive environmental emissions.

The VKC Series answers conventional vertical pump applications within a wide range of operating conditions.

Features

- Magnetic drive
- Non-aerating (no micro-bubbles)
- Reduced environmental emissions
- No wetted shaft bearings
- Mounts inside or outside of tank
- Polypropylene or PVDF construction
- Accepts standard NEMA or IEC motors
- Modular build: in 6" increments from 12" (30 cm) to 60" (152 cm)
- Up to 1.8 specific gravity
- Maximum temperature 140°F (60°C)
- Maximum working pressure: 60 psi

Typical Applications

- Circulation through filters & eductors
- Bio-filtration & odor control
- Fume scrubbers
- Chemical sumps

60 Hz, 3450 rpm

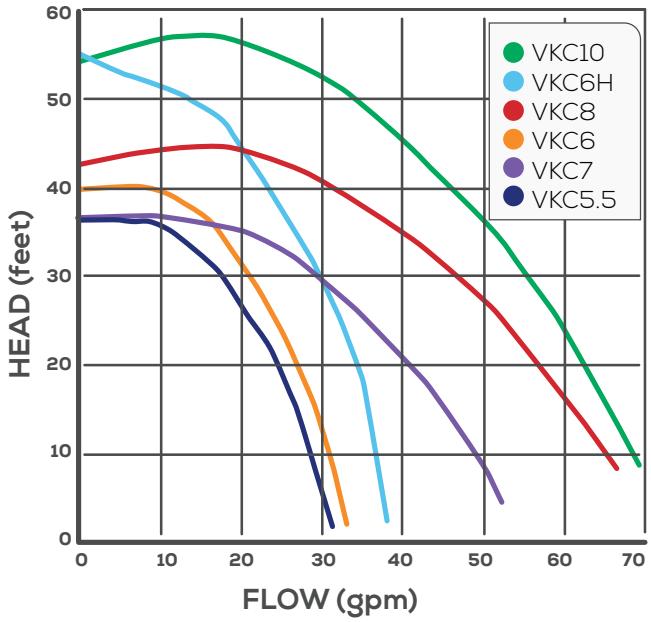

50 Hz 2900 rpm

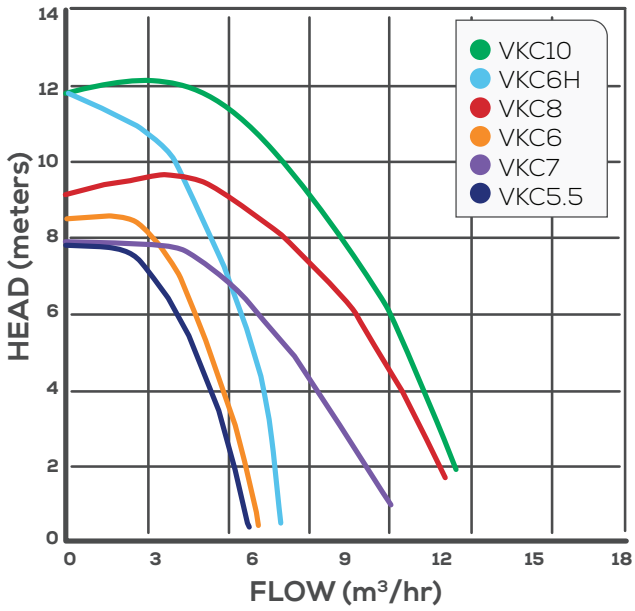

VKC SERIES

Specifications

Model	Suction x Discharge	Impeller Size		Maximum Flow		Maximum Head		Motor Drive	
	MNPT/BSP inch	inch	cm	3450 rpm gpm	2900 rpm m^3/h	3450 rpm ft	2900 rpm m	3450 rpm hp	2900 rpm kW
VKC5.5	1 x 3/4	3.0	7.6	31	5.7	37	7.8	1/3	0.25
VKC6	1 x 3/4	3.1	7.9	33	5.9	40	8.5	1/2	0.25
VKC6H	1 x 3/4	3.9	9.8	38	7	55	11.9	3/4	0.37
VKC7	1-1/2 x 1	3.1	7.9	52	9.5	37	7.9	1/2	0.25
VKC8	1-1/2 x 1	3.5	8.9	67	12	43	9.5	3/4	0.37
VKC10	1-1/2 x 1	3.9	9.8	69	12.6	54	12	1	0.55

Dimensions

With NEMA Motors (inches)

Model	NEMA Frame	A*	B*	D	E	F
VKC5.5/6/6H	56C	6-1/2	9	2-9/16	2-15/16	2-1/16
VKC7/8/10	56C	6-1/2	9	3-1/8	2-7/8	2-3/4

With IEC Motors (cm)

Model	IEC Frame	A*	B*	D	E	F
VKC5.5/6	63	9	18.4	6.5	7.5	5.2
VKC6/6H	71	10.5	20.3	6.5	7.5	5.2
VKC7/8/10	71	10.5	20.3	7.9	7.3	7

*Varies with motor manufacturer.

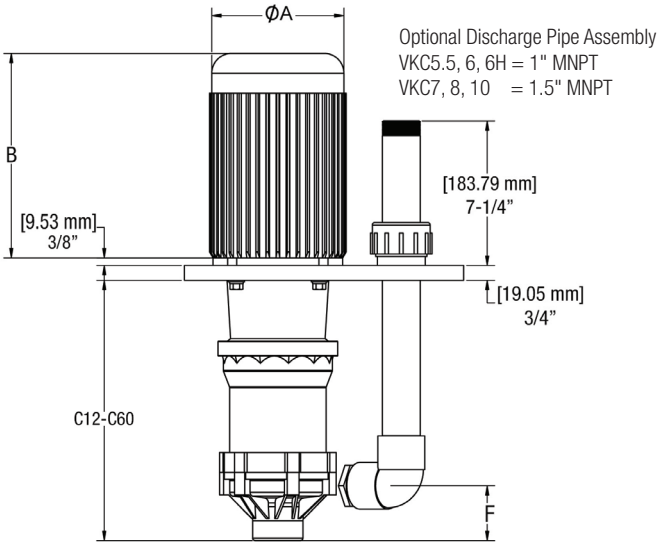

Available Module Lengths (inches)

Model	C12	C18	C24	C30	C36	C42	C48	C54	C60
VKC5.5/6/6H	12-5/16	18-3/8	24-7/16	30-7/16	36-1/2	42-9/16	48-5/8	54-11/16	60-3/4
VKC7/8/10	13-1/16	19-1/8	25-3/16	31-3/16	37-1/4	43-5/16	49-3/8	55-7/16	61-1/2

Available Module Lengths (cm)

Model	C12	C18	C24	C30	C36	C42	C48	C54	C60
VKC5.5/6/6H	31.3	46.7	62.1	77.3	92.7	108.1	123.5	138.9	154.3
VKC7/8/10	33.2	48.6	64	79.2	94.6	110	125.4	140.8	156.2

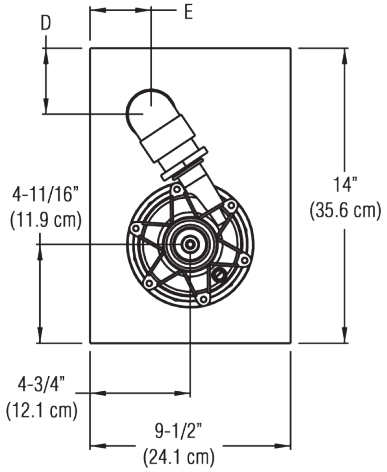

BOTTOM VIEW

finishthompson.com

FINISH THOMPSON INC. - UNITED STATES
921 Greengarden Road | Erie, PA 16501
800.934.9384 | ph 814.455.4478 | fx 814.455.8518
email fti@finishthompson.com

FINISH THOMPSON INC. - GERMANY
Otto-Hahn-Strasse 16 | Maintal, D-63477 Germany
49 (0)6181-90878-0 | fx 49 (0)6181-90878-18
email fti@finishthompson.com

OFFICIAL UK DISTRIBUTOR:
Michael Smith Engineers Limited **Website: www.michael-smith-engineers.co.uk** **Freephone: 0800 316 7891**