FINISH THOMPSON INC.

M SERIES AIR MOTORS
OPERATION & PARTS MANUAL

MODELS M6, M6X, M18, M19, M20, M65, M66

for PF, TB, TT, BT, & HVDP Series Pumps

P/N 110840 R1

FINISH THOMPSON INC.
921 Greengarden Road • Erie, PA 16501-1591 U.S.A.
Ph 814-455-4478 • Fax 814-455-8518
Email fti@finishthompson.com • www.finishthompson.com

EU Declaration of Conformity

CE

Finish Thompson Inc. hereby declares that the following machine(s) fully comply with the applicable health and safety requirements as specified by the EU Directives listed. The product may not be taken into service until it has been established that the driven Drum and Container pump complies with the provisions of all relevant EU Directives. The complete product complies with the provisions of the EU Directive on machinery safety provided pumps manufactured by Finish Thompson Inc. are used.

This declaration is valid provided that the devices are fully assembled and no modifications are made to these devices.

Type of Device:
Air Motors for Driving Drum and Container Pumps

Models:
M6 M6X M18 M19 M20 M57
M65 M66 S4 S4A

EU Directives:
Machinery Safety (2006/42/EC)

Applied Harmonized Standards:
EN ISO 12100
EN 983

Manufacturer:
Finish Thompson Inc.
921 Greengarden Road
Erie, Pennsylvania 16501-1591 U.S.A

Signed,

President

1 August 2016

Person(s) Authorized to Compile Technical File: Finish Thompson GmbH
Otto-Hahn-Strasse 16
Maintal, D-63477 DEU
Telephone: 49 (0)6181-90878-0

Introduction

This manual pertains to M Series drum pump air motors. Finish Thompson Inc. thanks you for choosing our products. We believe that the use of our products will be fully satisfactory. When properly installed and operated, your Finish Thompson motor and pump will provide long, trouble-free service; therefore, please read this manual carefully before carrying out any operations on the pump/motor unit. Any use other than that described herein is considered incorrect; consequently, Finish Thompson Inc. shall not be held responsible for any damages to people or things. In case of doubt or enquiries, please apply to our Technical Service department directly at the following address:

Finish Thompson, Inc.
921 Greengarden Rd.
Erie, PA 16501 U.S.A.
Tel. 1-814-455-4478
Fax 1-814-455-8518
www.finishthompson.com
fti@finishthompson.com

Index

Introduction 3

Warranty, General Terms & Conditions 4

Safety 5-6

Important Safety Information for Pumping Flammable or Hazardous Substances 7

Installation 8

Operation 8

M6 Assembly Drawing & Parts List 9

M6X Assembly Drawing & Parts List 10

M18, M19, & M20 Assembly Drawing & Parts List 11

M65 & M66 Assembly Drawing & Parts List 12

Warranty, General Terms & Conditions

1. The following terms and conditions apply to the sale of machinery, components and related services and products, of Finish Thompson Inc. (hereinafter "the products")
2. Finish Thompson Inc. (the manufacturer) warrants only that:
   a) its products are free of defects in material, design and workmanship at the time of original purchase;
   b) its products will function in accordance with Finish Thompson Inc. operation manuals; Finish Thompson Inc. does not guarantee that the product will meet the precise needs of the Customer, except for those purposes set out in any invitation to render documents or other documents specifically made available to Finish Thompson Inc. before entering into this agreement;
   c) high quality materials are used in the construction of the motors and that machining and assembly are carried out to the highest standards. Except as expressly stated above, Finish Thompson Inc. makes no warranties, express or implied, concerning the products, including all warranties of fitness for a particular purpose.

   This warranty shall not be applicable in circumstances other than defects in material, design, and workmanship. In particular warranty shall not cover the following:

   d) Periodic checks, maintenance, repair and replacement of parts due to normal wear and tear;
   e) Damage to the product resulting from:
      i. Tampering with, abuse or misuse, including but not limited to failure to use the product for its normal purposes as stated at the time of purchase or in accordance with Finish Thompson Inc. instructions for use and maintenance of the product, or the installation or improper ventilation or use of the product in a manner inconsistent with the technical or safety standard in force;
      ii. Repairs performed by non-authorized service workshop, or opening of the unit by non-authorized personnel, or use of non genuine Finish Thompson Inc. parts;
      iii. Accidents, force majeure or any cause beyond the control of Finish Thompson Inc., including but not limited to lightning, water, fire, earthquake, and public disturbances, etc.
3. The warranty shall cover the replacement or repair of any part, which is documented to be faulty due to construction or assembling, with new or repaired parts free of charge delivered by Finish Thompson, Inc. Parts subjected to normal wear and tear shall not be covered by the warranty. Finish Thompson Inc. shall decide as to whether the defective or faulty part shall be replaced or repaired. Transportation charges are prepaid to Finish Thompson.
4. The warranty of the products shall be valid for a period of **12 months** from the date of delivery, under the condition that notice of the alleged defect to the products or parts thereof be given to Finish Thompson, Inc. within the term of 8 days from the discovery.
5. Repair or replacement under the terms of this warranty shall not give a right to an extension to, or a new commencement of, the period of warranty. Repair or replacement under the terms of this warranty may be fulfilled with functionally equivalent reconditioned units. Finish Thompson Inc. qualified personnel shall be solely entitled to carry out repair or replacement of faulty parts after careful examination of the motor. Faulty parts or components when replaced by Finish Thompson Inc. will become the property of Finish Thompson Inc. If this warranty does not apply, the purchaser shall bear all cost for labor, material and transportation.
6. Finish Thompson Inc. will not be liable on any claim, whether in contact, tort, or otherwise, for any indirect, special, incidental, or consequential damages, caused to the customer or to third parties, including loss of profits, process down time, transportation costs, costs associated with replacement or substitution products, labor costs, installation or removal costs. In any and all events, manufacturer's liability shall not exceed the purchase price of the product and/or accessories.
7. **Return Policy.** Should you have any problems with this product, please contact the distributor in your area. The distributor will determine if a return to the factory is necessary and will contact the factory for a Return Authorization Number. Otherwise, contact our Technical Service Hotline (1-800-888-3743) or email techservice@finishthompson.com if you have any questions regarding product operation or repair.

Warranty Registration

Thank you for your purchase of this quality Finish Thompson product. Be sure to take a minute to register your pump at Finishthompson.com/warranty. Simply provide the model number, serial number and a few other pieces of information.

SAFETY

1. Introduction

   This manual contains all the information needed for the correct installation, use, and maintenance of your new Finish Thompson motor. It should be read and understood by all the personnel involved in installation, operating, and servicing of the pump before it is started.

2. Operator Qualification and Training

   The personnel in charge of the installation, operation and maintenance of the pump unit we produce must be quali¬fied and able to perform the operations described in this manual. Finish Thompson Inc. shall not be held responsible for the training level of personnel and for the fact that they are not fully aware of the contents of this manual.

3. Safety Instructions

   ⚠ FOR YOUR OWN SAFETY:

   BEFORE UNDERTAKING ANY SERVICE OPERATION ON YOUR MOTOR OR PUMP, PLEASE MAKE SURE TO WEAR THE PROPER PROTECTIVE GEAR.

   ⚠ GENERAL DANGER

   NEVER perform any maintenance operation on the motor while it is running

   NEVER use a plastic pump or an open, splash-proof, TEFC or non-ATEX motor when pumping or mixing flammable or combustible material. ALWAYS use and store the pump and motor in an upright position.

   NEVER immerse the motor in liquid.

   ALWAYS store motor upright and away from corrosive liquids and vapors.

   ALWAYS use an automatic air line lubricator, moisture trap and filter in the airline ahead of an air motor. (Use detergent SAE #10 in lubricator). Do not exceed 100 psi (6.9 bar) air pressure on all air motors.
   Maximum air consumption: M6A & M6XA = 32 cfm (15.1 lps)

   ⚠ Static sparking can cause an explosion. **Always** follow NFPA 77 and CLC/TR 60079-32-1 guidelines for control of static electricity and proper grounding methods when using ATEX and Hazardous Location motor models. When operating in a hazardous area or pumping a hazardous fluid, the motor and entire pump system must be grounded to prevent static discharge using a Finish Thompson Static Protection Kit.

4. Noise Level

Sound Pressure Rating			
Model	Air Pressure	Speed	dB(A)
S4, M6	80 PSI/5.6 bar	6,000 RPM	78
M6X, M65	100 PSI/7.0 bar	3,000 RPM	76
M66, M18	100 PSI/7.0 bar	3,000 RPM	87
M19	100 PSI/7.0 bar	3,000 RPM	90
M20	100 PSI/7.0 bar	2,500 RPM	105

5. Modifications and Spare Parts

   Any changes concerning the service of the motor as originally purchased can be executed only after written approval from Finish Thompson Inc. It is recommended to use only genuine Finish Thompson Inc. spare parts and approved accessories. The use of non-original spare parts or non-approved accessories will void warranty and removes any responsibility on our behalf for any damage caused to people or things.

Sécurité

1. Introduction
   Ce manuel donne toutes les instructions nécessaires pour assurer l'installation, l'utilisation et l'entretien adéquats du moteur de pompe Finish Thompson. Ces instructions doivent être lues et comprises par tout le personnel participant à l'installation, à l'utilis

2. Qualifications et formation des opérateurs
   Le personnel en charge de l'installation, de l'utilisation et de l'entretien de la pompe et de son moteur doit être qualifié et capable d'effectuer les tâches décrites dans ce manuel. Finish Thompson Inc. n'est pas responsable du niveau de formation du personnel et du fait qu'ils n'aient pas pris entièrement connaissance du contenu de ce manuel.

3. Consignes de sécurité

POUR VOTRE SÉCURITÉ

AVANT d'utiliser ou de faire l"entretien de votre pompe, s'assurer de porter les vêtements protecteurs adéquats, les protections oculaires (pour les yeux) et de suivre les procédures de sécurité standard pour manipuler les matières corrosives ou danger e uses pour la santé.

DANGERS GÉNÉRAUX

NE JAMAIS utiliser de pompe en plastique ni de moteur ouvert, étanche aux éclaboussures, de type TEFC ou non conforme à la norme ATEX, pour pomper ou mélanger des matières inflammables ou combustibles.

NE JAMAIS d'opération de maintenance sur le moteur lorsqu'il est en marche

TOUJOURS utiliser et remiser la pompe et le moteur en position verticale.

NE JAMAIS immerger le moteur dans un liquide.

TOUJOURS utiliser un lubrificateur de conduite d'air, un piège à humidité et un filtre automatiques dans l'avion devant un moteur pneumatique. (Utilisez le détergent SAE # 10 dans le lubrificateur). Ne dépassez pas 689 kPa (100 psi) sur tous les moteurs pneumatiques.

Des étincelles statiques peuvent provoquer une explosion. Suivez toujours les directives NFPA 77 et CLC / TR 60079-32-1 pour le contrôle de l'électricité statique et les méthodes de mise à la terre appropriées lors de l'utilisation de modèles de moteur ATEX et à emplacement dangereux. Lors de l'utilisation dans une zone dangereuse ou du pompage d'un fluide dangereux, le moteur et l'ensemble du système de pompe doivent être mis à la terre pour éviter les décharges d'électricité statique à l'aide d'un kit de protection statique Finish Thompson.

4. Niveau de bruit

Sound Pressure Rating			
Model	Air Pressure	Speed	dB(A)
S4, M6	80 PSI/5.6 bar	6,000 RPM	78
M6X, M65	100 PSI/7.0 bar	3,000 RPM	76
M66, M18	100 PSI/7.0 bar	3,000 RPM	87
M19	100 PSI/7.0 bar	3,000 RPM	90
M20	100 PSI/7.0 bar	2,500 RPM	105

5. Modifications et pièces de rechange
   Toute modification concernant l'entretien du moteur/pompe, tels qu'achetés initialement, peut être exécutée seulement après en avoir obtenu l'autorisation écrite de Finish Thompson Inc. On demande d'utiliser seulement les pièces de rechange originales de Finish Thompson Inc. et les accessoires approuvés. Le fait de ne pas utiliser les pièces de rechange originales de Finish Thompson Inc. ou les accessoires approuvés annulera la garantie et dégagera le fabricant de toute responsabilité liée aux blessures ou dommages matériels.

IMPORTANT SAFETY INFORMATION FOR PUMPING FLAMMABLE OR HAZARDOUS SUBSTANCES

Read these instructions before operating the pump and motor equipment. The manufacturer will not be responsible for any damage to property or to persons caused by improper use of the equipment.

⚠ **WARNING:** It is the responsibility of the user to operate the pump in conformance with OSHA rules for dispensing liquids. Pump containers should be grounded when using with flammable or combustible liquids to avoid static electricity.

1. Use only an explosion-proof rated electric or non-electric (air) motors on stainless steel pump tubes with a Static Protection Kit when transferring flammable or combustible liquids.

⚠ **WARNING**: Never use an open, splash-proof, TEFC, battery-operated or non-explosion-proof rated motor or a plastic pump tube when transferring flammable or combustible liquids.

2. When operating a drum pump (especially when pumping flammable, combustible or hazardous liquids) follow all electrical and safety codes.
   a) In the United States: the United States Occupational Safety and Health Act (OSHA), most recent National Electrical Code (NEC), National Fire Protection, Inc. (NFPA) Code 30 (Flammable and Combustible Code), NFPA 77 (Static Electricity), NFPA 251 (Standard Method of fire Test of Building Construction), NFPA 704 (Identification of the Fire Hazards of Materials), and other NFPA codes, local codes and ordinances.
   b) Outside the United States: the ATEX equipment directive 2014/34/EU where applicable, the ATEX workplace 99/92/EC directive where applicable, in addition the precautions of the U.S. codes listed herein and all other local codes and ordinances.
3. Pumping hazardous, flammable, or combustible liquids should only be done in buildings, rooms, or areas suited for this purpose. (See NFPA 30, NFPA 78, NFPA 80, NFPA 251, NFPA 704, other suitable NFPA codes, OSHA, ATEX workplace 99/92/EC directive insurance companies, and other local codes and ordinances.)
4. When filling cans, drums, etc. with combustible or flammable liquids, both container pumping from and container pumping to, should be bonded and grounded to dissipate possible accumulations of static electricity, and minimize sparks caused by static electricity (refer to NFPA 77 and CLC/TR 60079-32-1 for specific details).

⚠ **WARNING**: Avoid splashing. Splash filling can create static electricity and is extremely hazardous. Reduce motor speed to prevent splashing.

⚠ **WARNING**: Fluid velocity must be 3 feet/.9 meter/second maximum (7 gpm/26.5 lpm in 1” hose and 4 gpm/15 lpm in ¾” hose) to reduce risk of static electricity. Reduce motor speed to reduce the fluid velocity.

5. Before using, confirm that the pump and any accessories (hose, nozzle, flow meter, etc.) materials of construction are suitable for the material to be pumped and that the maximum temperature is not exceeded.

INFORMATIONS IMPORTANTES SUR LA SÉCURITÉ DURANT LE POMPAGE DE SUBSTANCES INFLAMMABLES OU DANGEREUSES

Veuillez lire attentivement ces instructions avant d’utiliser la pompe et l’équipement du moteur. Le fabricant ne sera pas tenu responsable des dommages matériels ou corporels causés par une utilisation inappropriée de l’équipement.

⚠ **AVERTISSEMENT:** Il est de la responsabilité de l’utilisateur de faire fonctionner la pompe conformément aux règles OSHA (Santé et Sécurité au Travail) relatives à la distribution de liquides. Les conteneurs de pompes doivent être électriquement mis à la terre lors de l’utilisation de liquides inflammables ou combustibles afin d’éviter toute électricité statique.

1. Lors du transfert de liquides inflammables ou combustibles, utilisez uniquement des moteurs électriques ou non électriques (pneumatiques) antidéflagrants sur des tubes de pompe en acier inoxydable dotés d’un dispositif de protection antistatique.

⚠ **AVERTISSEMENT**: N’utilisez jamais de moteur ouvert, à l’épreuve des éclaboussures, TEFC, alimenté par piles ou non antidéflagrant, ni un tube de pompe en plastique lors du transfert de liquides inflammables ou combustibles.

2. Lors de l’utilisation d’une pompe à tambour (en particulier lors du pompage de liquides inflammables, combustibles ou dangereux), respectez tous les codes électriques et les codes de sécurité.
   a) Aux États-Unis : Loi américaine sur la sécurité et la santé au travail (OSHA); le code national de l’électricité (NEC) le plus récent; le code 30 de la NFPA (code d’inflammabilité et de produits combustibles); le code NFPA 77 (électricité statique); le code NFPA 251 (Méthode standard de test d’incendie de la construction de bâtiments); le code NFPA 704 (Identification des risques d’incendie des matériaux) et autres codes et règlements de la NFPA.
   b) En dehors des États-Unis : La directive sur les équipements ATEX 2014/34 / EU, le cas échéant, la directive ATEX sur le lieu de travail 99/92 /EC, le cas échéant, ainsi que les précautions des codes des États-Unis énumérés dans la présente et de tous les autres codes, lois et règlements locaux.
3. Le pompage de liquides dangereux, inflammables ou combustibles ne doit être effectué que dans des bâtiments, des pièces ou des zones adaptées à cet usage. (Voir NFPA 30, NFPA 78, NFPA 80, NFPA 251, NFPA 704, autres codes NFPA appropriés, OSHA, les directives des compagnies d’assurance ATEX 99/92 /CE, et autres codes, lois et règlements locaux.)
4. Lors du remplissage de bidons, fûts, etc. avec des liquides combustibles ou inflammables, les conteneurs d’où le liquide est pompé et le conteneur recevant le liquide doivent être reliés et mis à la terre pour éviter toute accumulation éventuelle d’électricité statique et minimiser ainsi les étincelles causées par l’électricité statique (voir NFPA 77). et CLC / TR 60079-32-1 pour des détails spécifiques).

⚠ **AVERTISSEMENT:** Évitez les éclaboussures. Les éclaboussures peuvent créer de l’électricité statique et sont extrêmement dangereuses. Réduisez la vitesse du moteur pour éviter les éclaboussures.

⚠ **AVERTISSEMENT:** La vitesse du fluide doit être au maximum de 3 pieds / 0,9 mètre / seconde (7 gpm / 26,5 lpm dans un tuyau de 1”; et 4 gpm / 15 lpm dans un tuyau de ¾”) afin de réduire le risque d’électricité statique. Réduisez la vitesse du moteur afin de réduire ainsi la vitesse du fluide.

5. Avant utilisation, assurez-vous que les matériaux de la pompe et des accessoires (tuyau, ajutage, débitmètre, etc.) sont compatibles avec le fluide et que la température maximale n’est pas dépassée.

INSTALLATION

M6, M6X, M18-M20

1. Unpack motor and pump tube from carton. Check for shipping damage. If damage is detected, save the packaging and notify the carrier immediately.
2. Ensure motor and pump compatibility. I.E., labeling.
3. If motor and pump tube are boxed separately, the motor will need to be fastened to the pump tube.
4. Ensure no obstructions on the coupling of either motor or pump/mixer.
5. Position the pump tube upside down onto the motor. The ball valve & muffler should be aligned with the discharge spout for ease of operation.
6. Slide pump/mixer down into motor until couplings mate and pump/mixer is seated properly.
7. For M6 & M6X, install 2 socket head screws and nuts in mounting holes and tighten securely. For M18, M19, and M20 tighten set screws.
8. Check to ensure that the motor is secured to the pump/mixer before operating. If not, repeat steps 1-7.
9. ALWAYS use an automatic air line lubricator, moisture trap and filter in the airline ahead of an air motor. (Use detergent SAE #10 in lubricator). Do not exceed 80 psi (551 kPa) on M6 and 100 psi (689 kPa) on all other air motors.

M65 & M66

1. Check the rotation direction of the LR motor (air and induction motors) before installing the motor onto the pump.

⚠ WARNING: Motor rotation must be clockwise when viewed from the fan end of the motor. Rotating the motor in the wrong direction will cause damage to the pump.

2. Remove the motor adapter bolts (see Figure 2) and separate the motor adapter from the motor.
3. Thread the motor adapter onto the LR drive assembly. Hand tighten the motor adapter.
   Note: Threads are left-handed. Also, thread lubricant is recommended to ensure smooth, bind free assembly.
4. The LR motor coupling consists of two 5/16” diameter pins welded to a hub. The LR drive assembly coupling has two slots that receive these pins. Align the pins of the motor coupling with the slots on the drive assembly coupling and slide the motor onto the drive assembly.

   Note: Make sure the coupling is engaged properly and the motor adapter face is flush with the motor face.
5. Rotate the motor until the motor adapter mounting holes align with the threaded holes in the motor face.
6. Install the motor adapter bolts and torque to approximately 7 ft.-lbs. (9.5 N•M)

REMOVAL - HVDP-LR:

1. Remove the LR motor adapter bolts.
2. Remove the LR motor.

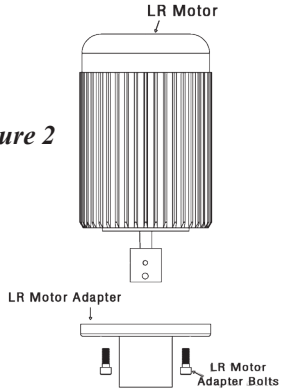

Figure 2

OPERATION

1. Turn the air motor ball valve to the closed position.
2. Attach the air motor to an air supply line.
3. Insert the pump tube into the fluid to be dispensed and the hose in the container to be filled.
4. While holding the air motor ball valve and hose, slowly turn the valve to the desired flow rate. (Note: Pump performance will vary depending on air pressure & volume.)

M6 MODEL

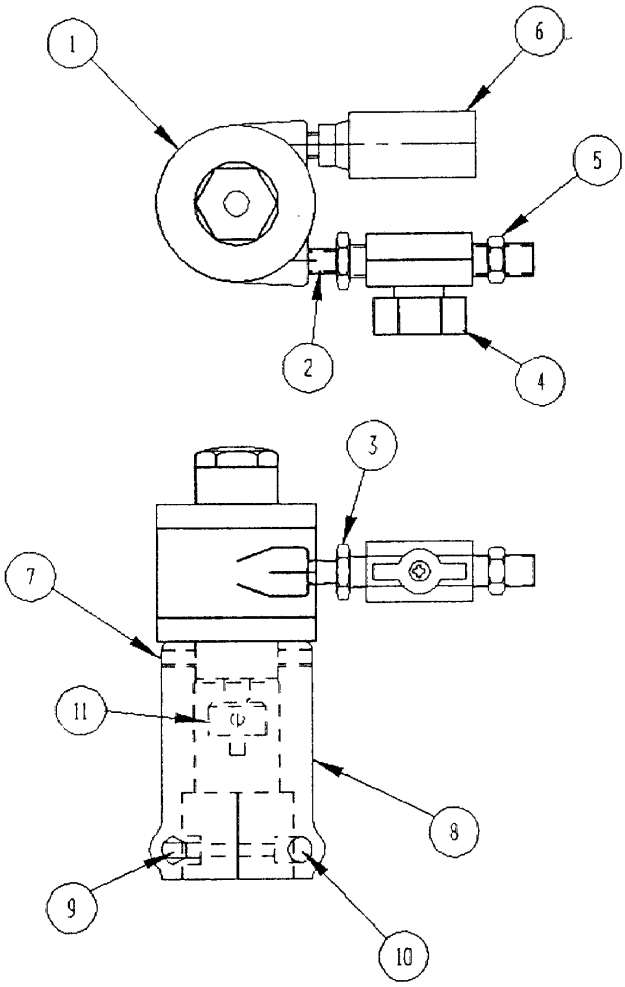

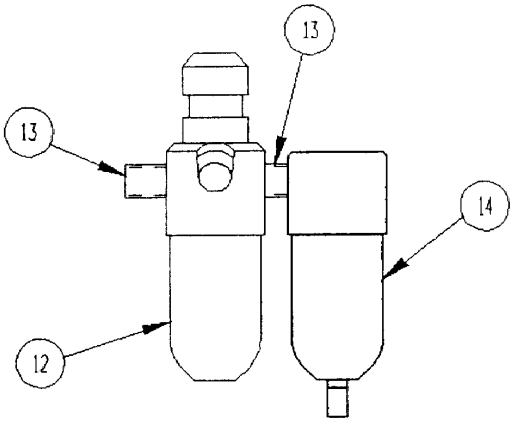

FILTER AND LUBRICATOR ASSEMBLY
A100003

Item	Quantity	Description	Part Number
1	1	Air Motor	M101717
2	1	Pipe Nipple	J100107
3	1	Hex Reducer Bushing	J100057
4	1	Ball Valve	J100073
5	1	Hose Fitting	J100036
6	1	Muffler	J100033
7	2	Set Screw	J100040
8	1	Air Motor Mount	M100013-1
9	2	Socket Head Cap Screw	108392
10	2	Hex Nut	J100990
11	1	Half Coupling	J100013
12	1	Lubricator	J100035
13	2	Pipe Nipple	J102463
14	1	Filter	J100034
-	-	Air Motor Repair Kit (Not Shown)	J100060

M6X MODEL

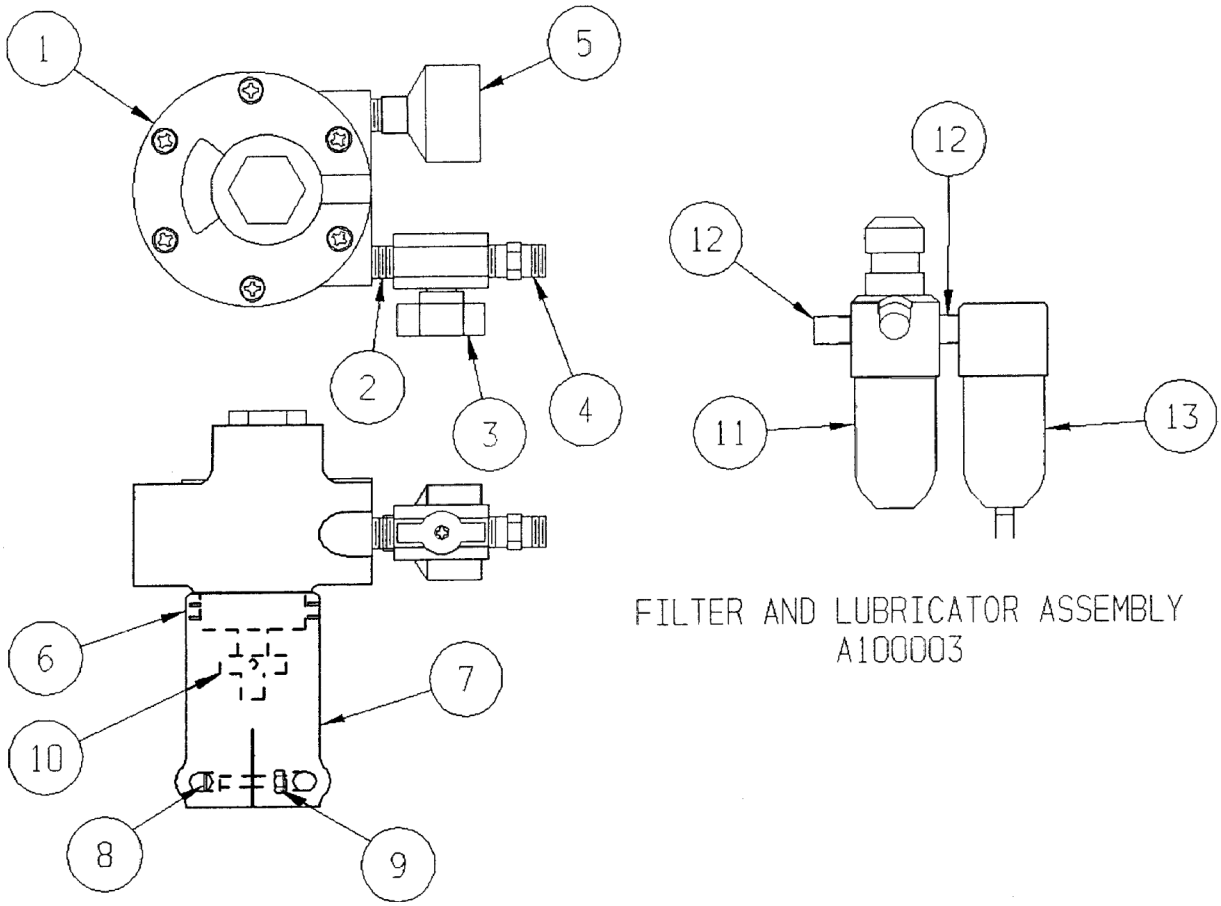

Item	Quantity	Description	Part Number
1	1	Air Motor	M101720
2	1	Pipe Nipple	J102463
3	1	Ball Valve	J100073
4	1	Hose Fitting	J100036
5	1	Muffler	J100074
6	2	Set Screw	J100040
7	1	Air Motor Mount	M100013-2
8	2	Socket Head Cap Screw	108392
9	2	Hex Nut	J100990
10	1	Half Coupling	J101500
11	1	Lubricator	J100035
12	2	Pipe Nipple	J102463
13	1	Filter	J100034
-	-	Air Motor Repair Kit (Not Shown)	J100075

M18, M19, M20 MODELS

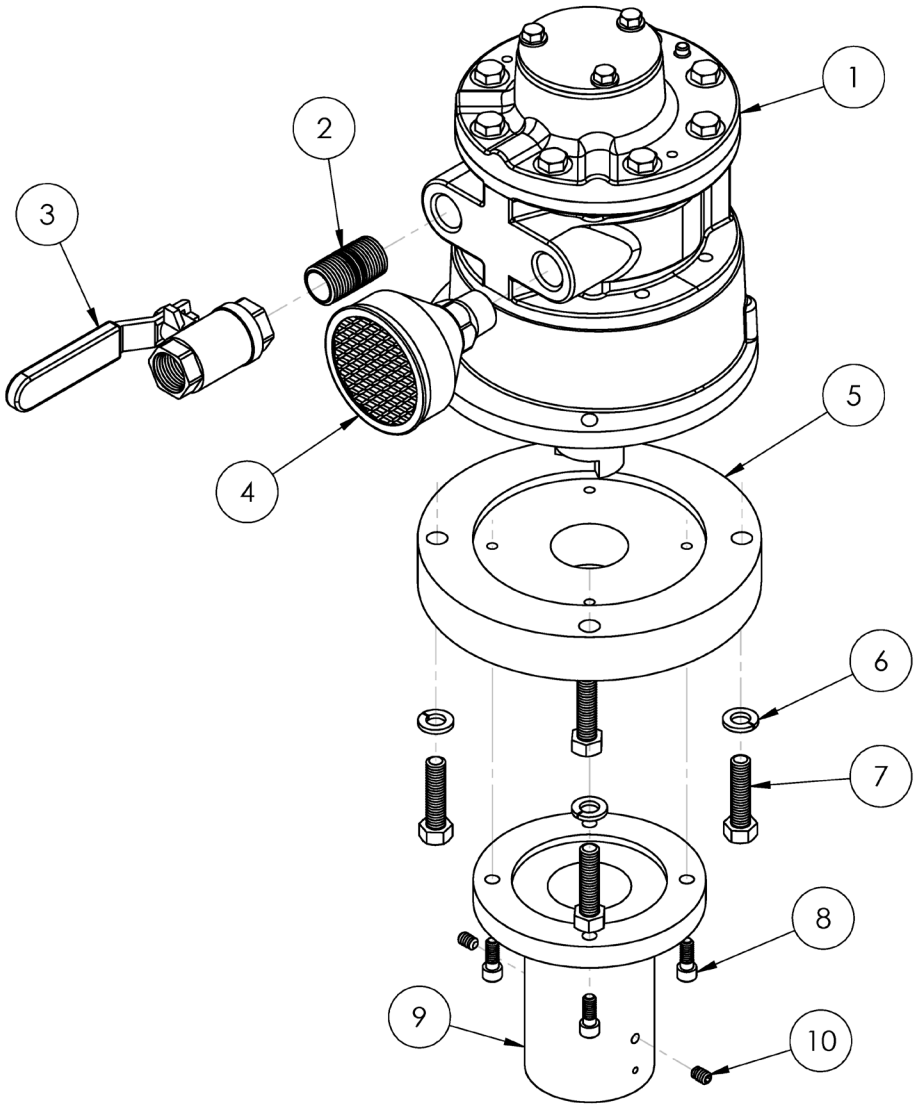

Item	Quantity			Description	Part Number
	M18	M19	M20		
1	1	-	-	Air Motor	J102661
	-	1	-	Air Motor	J102662
	-	-	1	Air Motor	J102663
2	1	-	-	Pipe Nipple-1/4"	J102463
	-	1	1	Pipe Nipple-1/2"	J100095
3	1	-	-	Ball Valve-1/4"	J100073
	-	1	1	Ball Valve-1/2"	J100094
4	1	-	-	Muffler	J100074
	-	1	1	Muffler	J100097
5	1	1	1	Motor Adapter Flange	M100086
6	4	4	4	Lock Washer-3/8"	J100834
7	4	4	4	Hex Head Cap Screw-3/8"	J102857
8	4	4	4	Socket Head Cap Screw-1/4"	J102643
9	1	1	1	Motor Adapter	M100044
10	2	2	2	Set Screw	J100040
-	1	-	-	Air Motor Repair Kit (Not Shown)	J100100
-	-	1	-	Air Motor Repair Kit (Not Shown)	J100101
-	-	-	1	Air Motor Repair Kit (Not Shown)	J100102

M65 & M66 MODELS

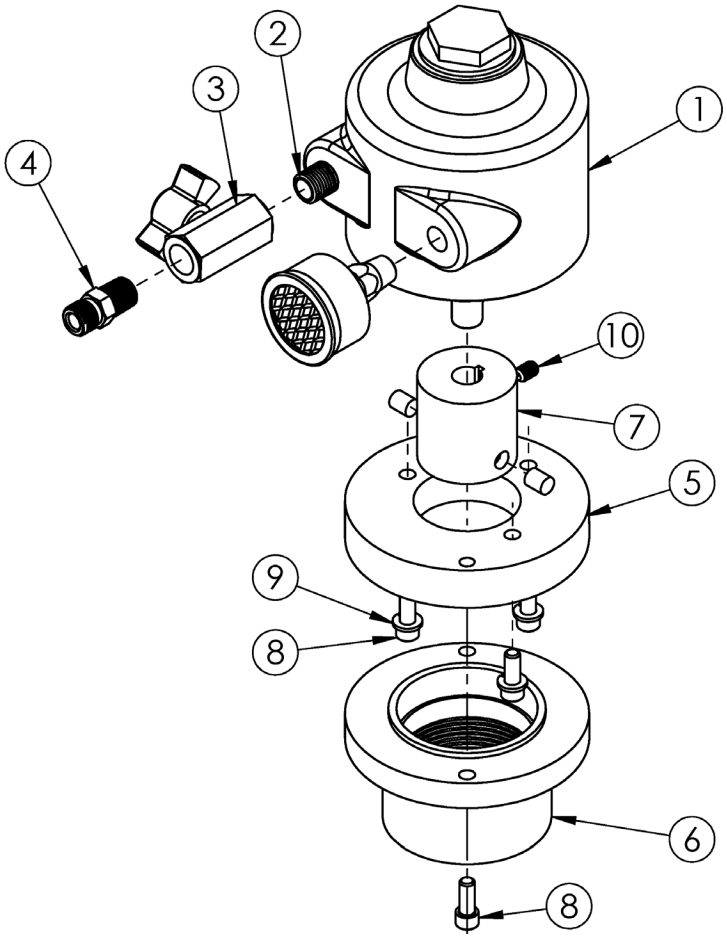

Item	Quantity		Description	Part Number
	M65	M66		
1	1	-	Air Motor	105467
1	-	1	Air Motor	105270
2	1	1	Pipe Nipple	J102463
3	1	1	Ball Valve	J100073
4	1	1	Hose Fitting	J100036
5	1	1	Motor Adapter Flange	105111
6	1	1	Motor Adapter	105112
7	1	1	HVDP Shaft Adapter	105246
8	5	5	Socket Head Cap Screw	J102643
9	3	3	Lock Washer	J100672
10	2	2	Set Screw	J100040
-	1	-	Air Repair Kit (Not Shown)	J100075
-	-	1	Air Repair Kit (Not Shown)	108067

FINISH THOMPSON INC.

921 Greengarden Road • Erie, PA 16501-1591 U.S.A.
Ph 814-455-4478 • Fax 814-455-8518
Email fti@finishthompson.com • www.finishthompson.com

Tech Service 1-800-888-3743
techservice@finishthompson.com
P/N 110840, 4-17-2020 Rev 1

OFFICIAL UK DISTRIBUTOR: Michael Smith Engineers Limited | 0800 316 7891 | www.michael-smith-engineers.co.uk