Model FT025 Non-Metallic

AIR OPERATED DOUBLE DIAPHRAGM PUMPS

Specifications

Suction & Discharge Size:	I.D.: 1/4″ O.D.: 3/4″
Standard Porting Location*:	End
Connection Types:	FNPT/FBSPT & MNPT/MBSPT
Air Inlet Size:	1/8″ FNPT OR FBSPT

*Optional NPT/BSP threaded center port location in either horizontal or vertical position

Capabilities

Maximum Flow Rate:	5.8 gpm (22 lpm)
Maximum Air Supply Pressure:	120 psi (8.3 bar)
Displacement Per Stroke:	0.005 gal (0.02 lit)
Minimum Air Inlet Pressure:	20 psig (1.4 bar)
Maximum Particle Size :	0.06 in (1.8 mm)
Sound Pressure:	65.3 dB(A)
Operating Temperature:	Determined by elastomers

Performance

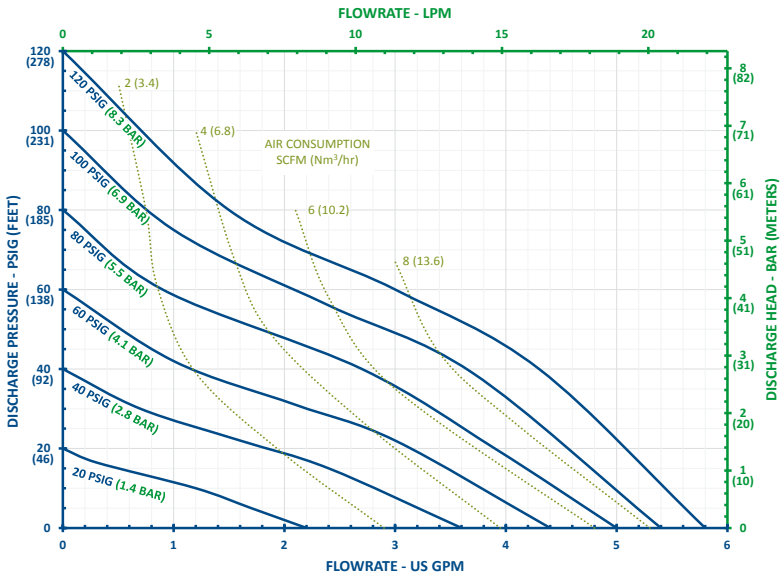

Note: Full stroke diaphragm allows performance to be equal for all elastomers.

Typical Applications

- Acids & Bases
- Plating Solutions
- Wastewater
- Paints, Inks, Solvents
- Ceramic Slip and Glaze
- Lubricants and Oils

Typical Industries

- Mining
- Paints and Coatings
- Ceramics
- Pulp and Paper
- Electroplating & Anodizing
- Wastewater
- Marine
- Chemical Manufacturing & Distribution
- OEM's

CHANGE IS IN THE AIR

Construction

Wetted Materials:	Polypropylene, PVDF, ** Conductive Polypropylene
Diaphragm Materials:	Santoprene™, PTFE
Air Valve:	GFRPP, Conductive Acetal
Ball Materials:	Santoprene™, PTFE
Seat Materials:	Polypropylene, PVDF, Carbon Filled PTFE
O-ring Matierals:	Santoprene™, FEP/FKM

Santoprene™ is a registered tradename of Exxon Mobil Corp.
Hytrel® is a registered tradename of Dupont™

Pat. http://ftiair.com/resources/ip/

Dimensions

Maximum Height:	6-7/8 in (174 mm)
Maximum Width:	5 in (127 mm)
Maximum Depth:	6-5/8 in (168 mm)

Weight

Polypropylene & ** Conductive Polypropylene:	2.3 lb (1.0 kg)
PVDF:	3.1 lb (1.4 kg)

**ATEX Certification (conductive polypropylene only)
II 2GD Ex h IIC T6 Gb
II 2GD Ex h IIIC T6 Db

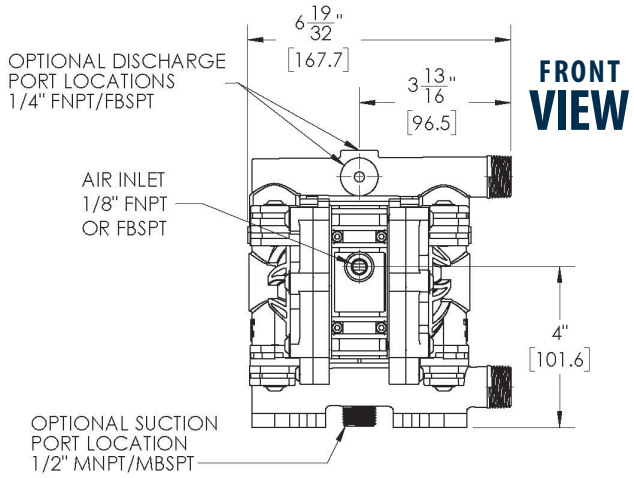

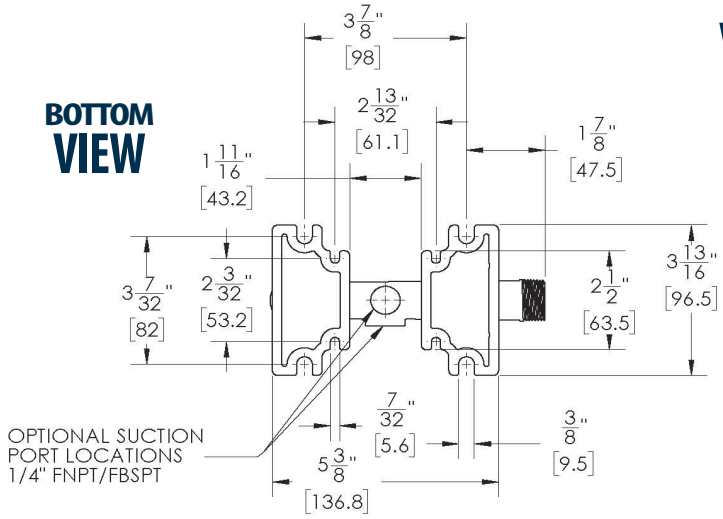

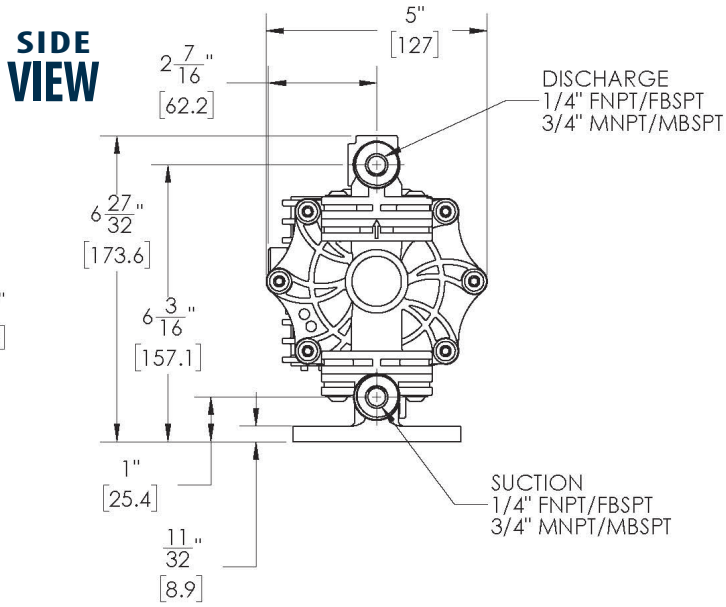

FTI AIR
921 GREENGARDEN ROAD ERIE, PA 16501
Tel: (800) 934-9384 • Fax: (814) 459-3460
www.FTIAIR.com

OFFICIAL UK DISTRIBUTOR:
Michael Smith Engineers Limited
www.michael-smith-engineers.co.uk
freephone: 0800 316 7891

5 YEAR WARRANTY

USA Designed, Engineered & Assembled