Model FT10S Metallic

AIR OPERATED DOUBLE DIAPHRAGM PUMPS

Specifications

Suction & Discharge Size:	1″ x 1″
Standard Porting Location*:	End
Connection Types:	FNPT, FBSPT
Air Inlet & Air Exhaust Size:	1/2″ FNPT x 1/2″ FNPT

*Optional NPT or BSP threaded center port location in either horizontal or vertical position

Capabilities

Maximum Flow Rate:	56 gpm (212 lpm)
Maximum Air Supply Pressure:	120 psi (8.3 bar)
Displacement Per Stroke:	0.084 gal (0.32 lit)
Minimum Air Inlet Pressure:	10 psig (0.7 bar)
Maximum Particle Size :	0.25 in (6.4 mm)
Sound Pressure:	73.6 dB(A)
Operating Temperature:	Determined by elastomers

Performance

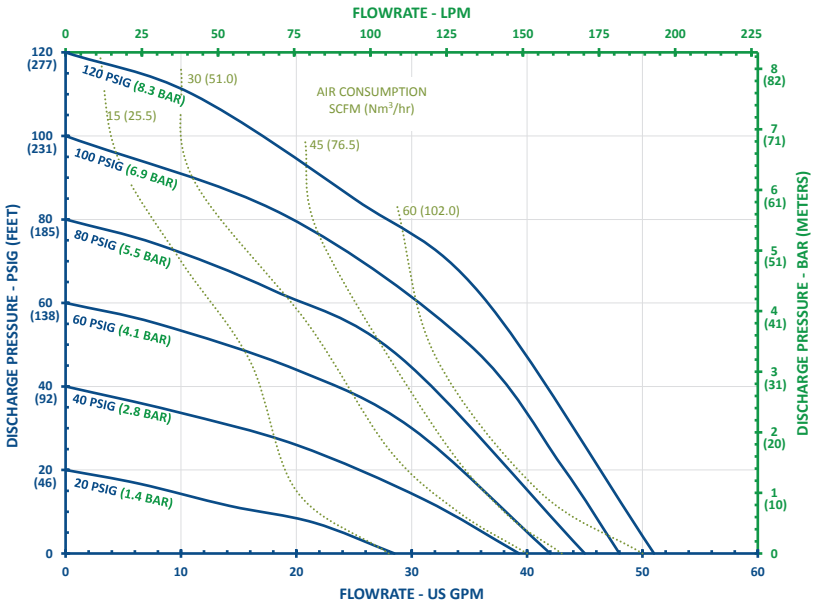

Note: Full stroke diaphragm allows performance to be equal for all elastomers.

Typical Applications

- Acids & Bases
- Plating Solutions
- Wastewater
- Paints, Inks, Solvents
- Ceramic Slip and Glaze
- Lubricants and Oils

Typical Industries

- Mining
- Paints and Coatings
- Ceramics
- Pulp and Paper
- Electroplating & Anodizing
- Wastewater
- Marine
- Chemical Manufacturing & Distribution
- OEM's

CHANGE IS IN THE AIR

Construction

Wetted Materials:	316SS
Diaphragm Materials:	Neoprene, Santoprene™, FKM, EPDM, PTFE, Buna, Hytrel®, Polyurethane
Air Valve:	GFRPP, Aluminum
Ball Materials:	Neoprene, Buna, EPDM, FKM, Santoprene™, PTFE, 316SS
Seat Materials:	Aluminum, 316SS, PTFE
O-ring Materials:	Neoprene, Buna, EPDM, FKM, PTFE, FEP/FKM

Santoprene™ is a registered tradename of Exxon Mobil Corp.
Hytrel® is a registered tradename of Dupont™

Pat. http://ftiair.com/resources/ip/

Dimensions

Maximum Height:	14-3/16 in (360 mm)
Maximum Width:	14-5/16 in (364 mm)
Maximum Depth:	10-11/16 in (271 mm)

Weight

Stainless Steel:	48.7 lb (22.1 kg)

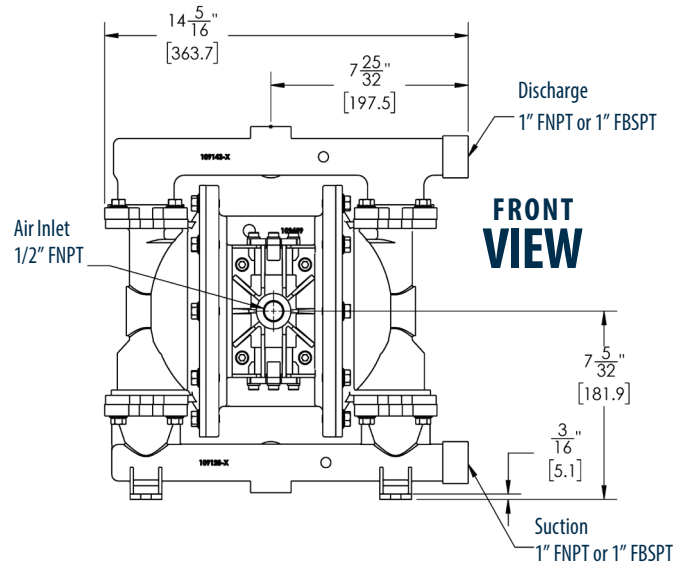

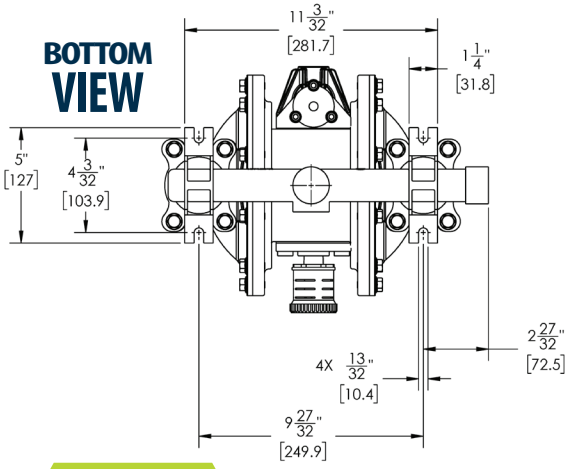

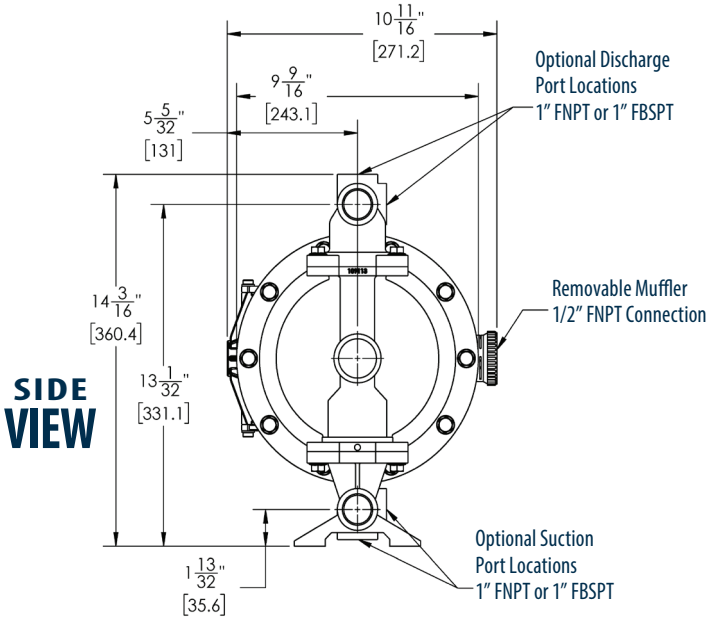

FTI AIR
921 GREENGARDEN ROAD ERIE, PA 16501
Tel: (800) 934-9384 • Fax: (814) 459-3460
www.FTIAIR.com

OFFCIAL UK DISTRBUTOR:
Michael Smith Engineers Limited
www.michael-smith-engineers.co.uk
freephone: 0800 316 7891

5 YEAR WARRANTY

USA Designed, Engineered & Assembled